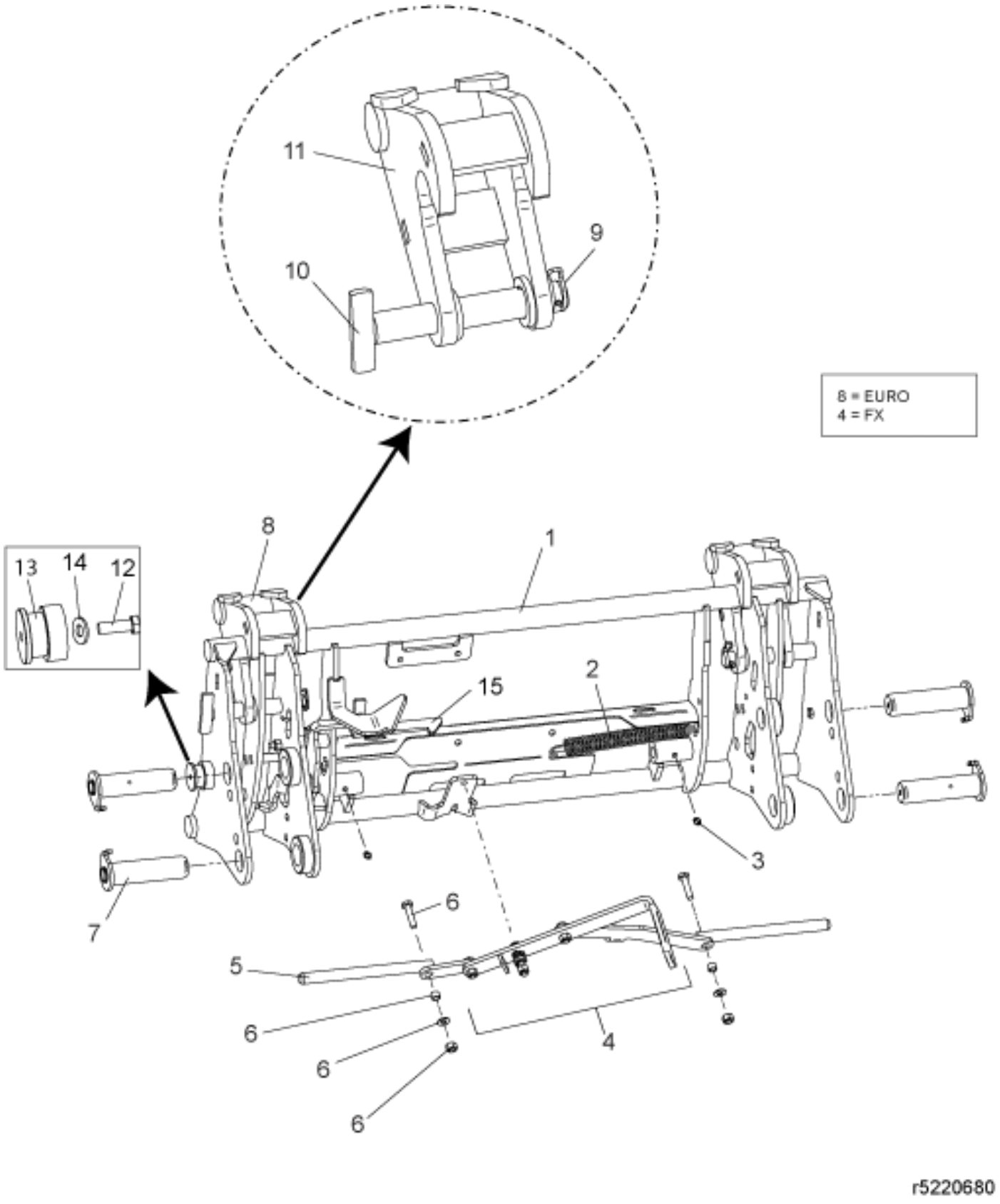

© 2025 Jost

Description	Tool carrier
Part assemblies	Euro/FX

PartNo	Pos	Qty	Name	Specifications
5220627-7	1	1 PCS	Tool carrier	Grey
1101035	2	1	Spring	
5023005	3	2	Greaser	M 10 x 1
5220646	4	1 PCS	Lever kit	
4500864	5	2 PCS	Pin kit	Includes 4500867
4500867	6	2	• Screw kit	Included in Pin kit
60021068	7	1 PCS	Pin kit	Replaces 9020072
5220720	8	2 PCS	FX Adaptor Kit	
5006027	9	2	• Retaining ring	
5220719	10	2	• Locking Pin	
5220710	11	2 PCS	• FX Adaptor	
5002077	12	2	• Screw	M6S 10x30
5220730	13	2 PCS	• Sleeve	Replaces 5220717 from 2012-12
5013110	14	2	• Washer	BRB 10.5x22x2
4500833	15	1 PCS	Click-on	

© 2025 Jost