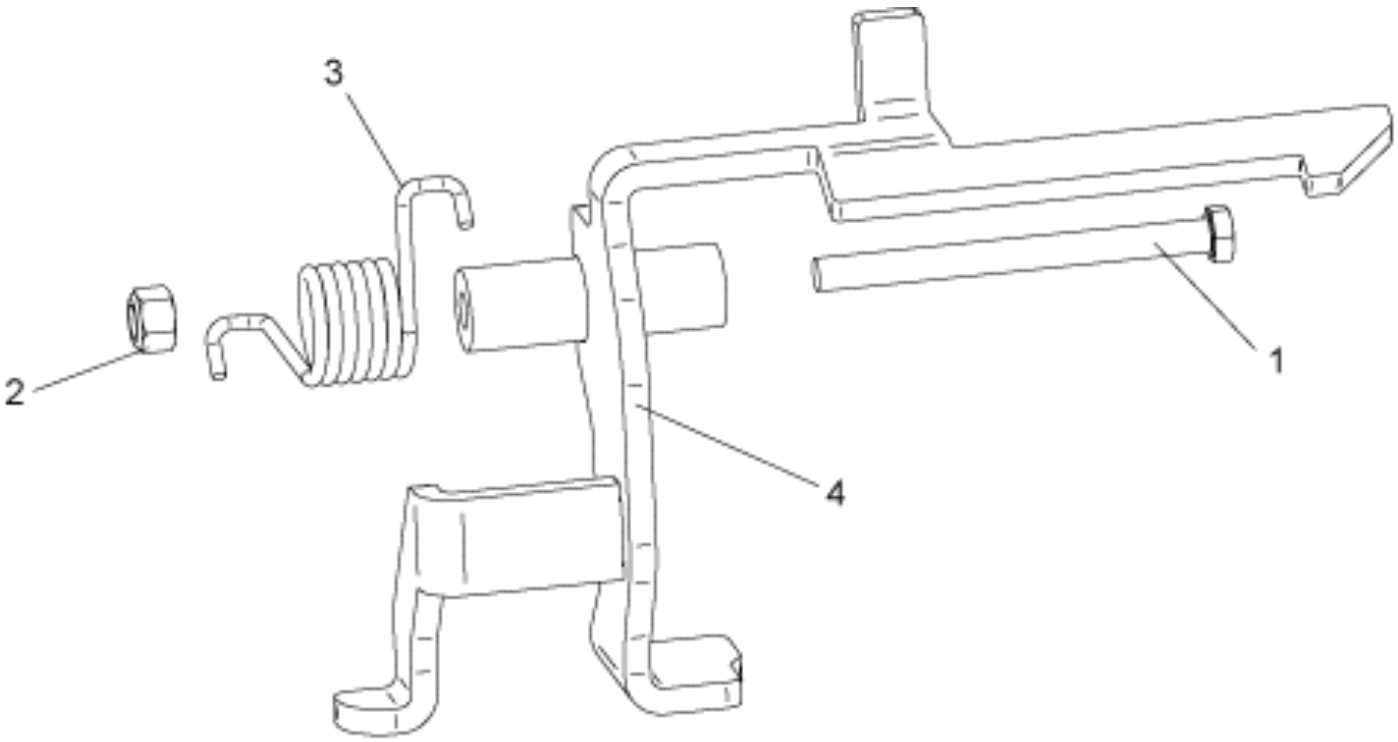

r4500833

© 2025 Jost

Part assemblies	Click-on

PartNo	Pos	Qty	Name	Specifications
5002091	1	1	Screw	M6S 10x120
5011554	2	1	Nut	Loc-King M10
5021941	3	1 PCS	Spring	
5220641	4	1 PCS	Bracket	

© 2025 Jost