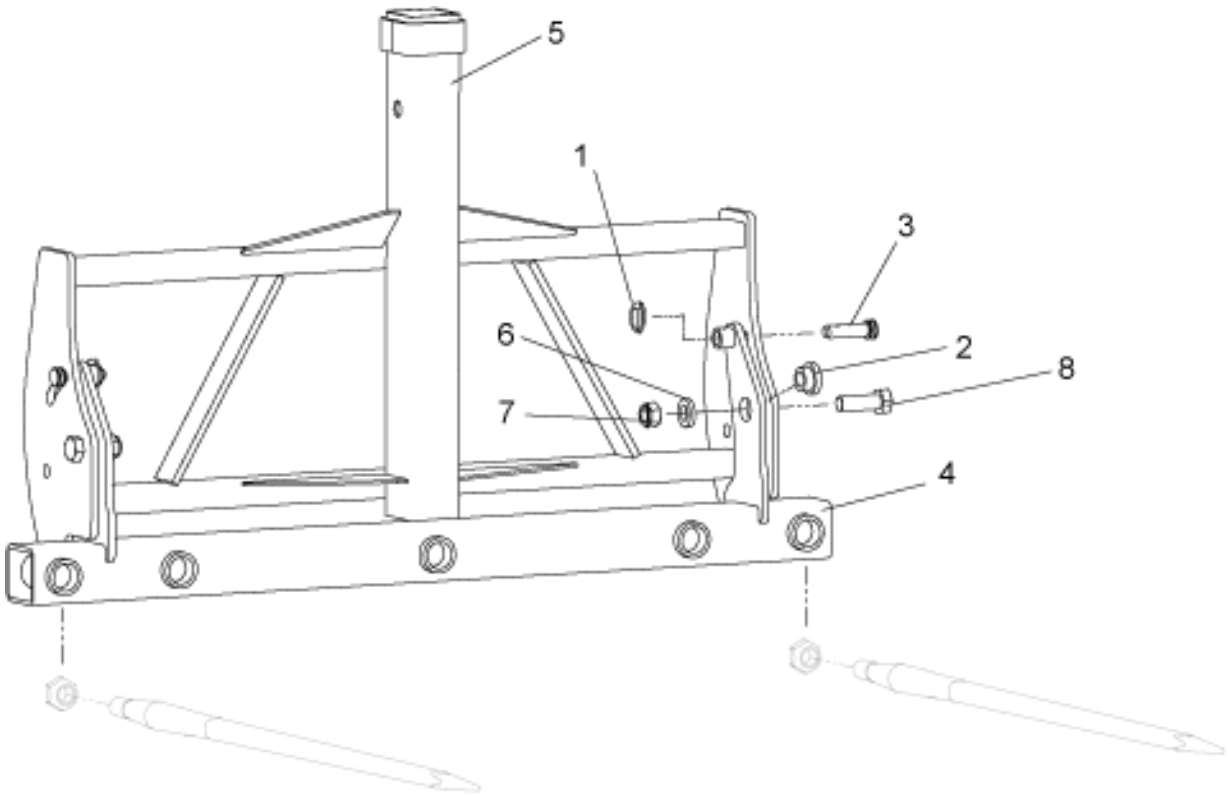

r11251360

© 2025 Jost

Part assemblies	Square Bale Fork
Specification	Year To: 5/1/2022 12:00:00 AM

PartNo	Pos	Qty	Name	Specifications
20725101	1	2	Linch pin	
11260344	2	2 PCS	Spacer tube	
11260343	3	2	Locking Pin	
11251361	4	1 PCS	Beam	
11251359	5	1 PCS	Frame	
20721212	6	2 PCS	Washer	721212
20708146	7	2 PCS	Nut	M24, 708146
5002252	8	2 PCS	Screw	M6S M24X70 (8.8)

© 2025 Jost