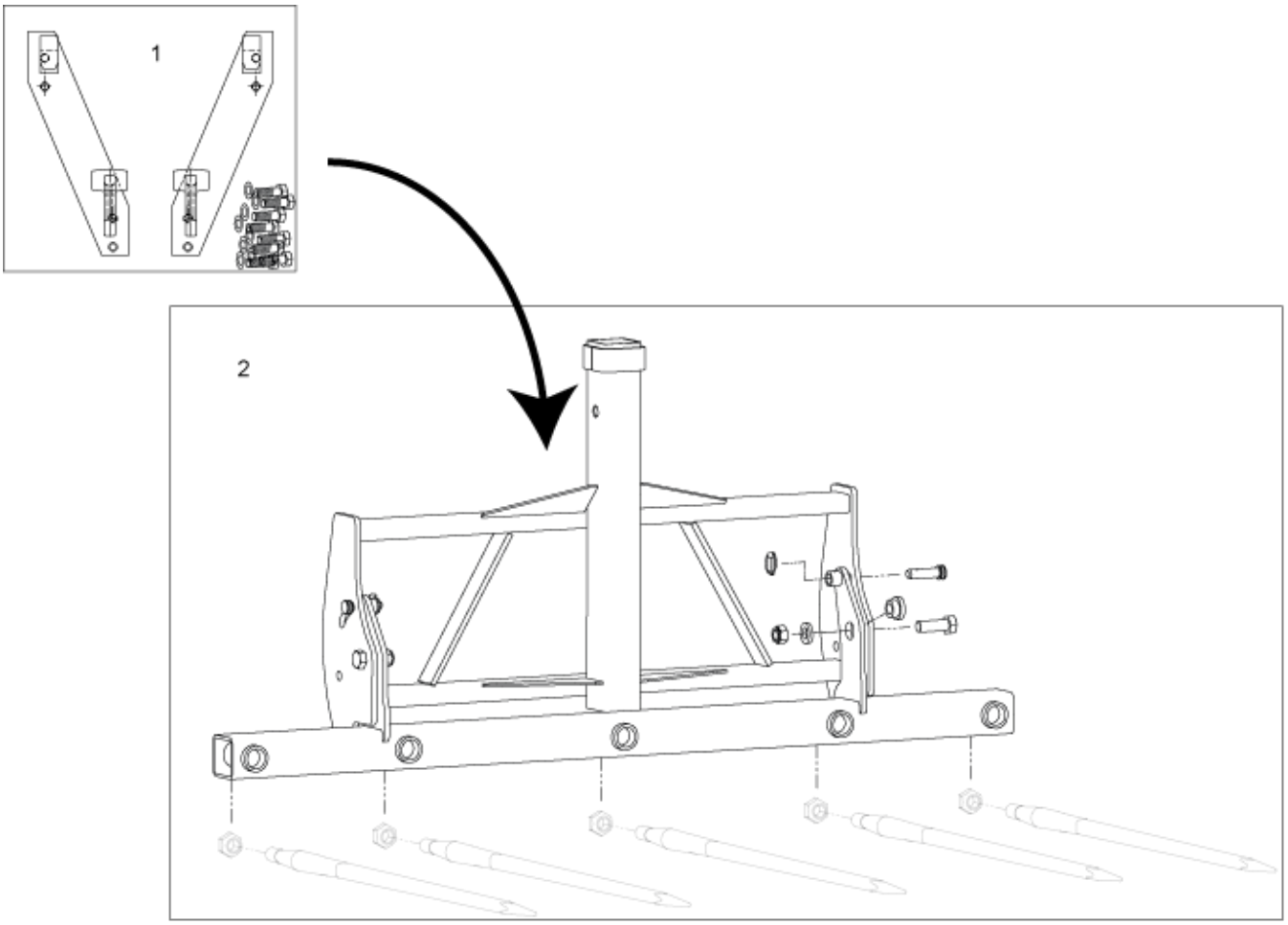

r11251378

© 2025 Jost

Part assemblies	Square Bale Fork, Euro
Specification	Year To: 5/1/2022 12:00:00 AM

PartNo	Pos	Qty	Name	Specifications
11209714	1	1 PCS	Attachment kit Euro	
11251370	2	1 PCS	Square Bale Fork	5/1/2022 12:00:00 AM
5068004	3	5 PCS	Tine	

© 2025 Jost