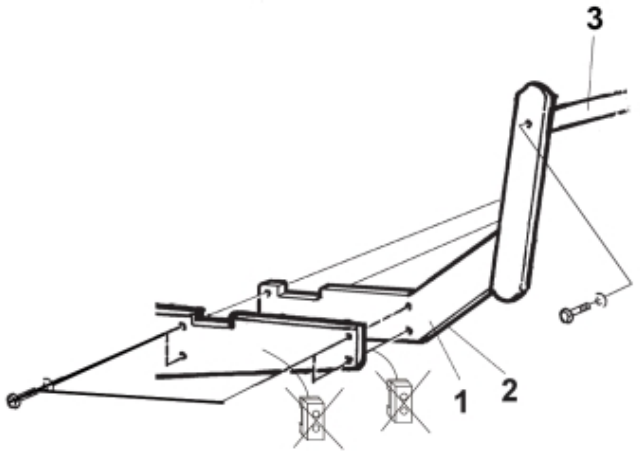

M 1422089

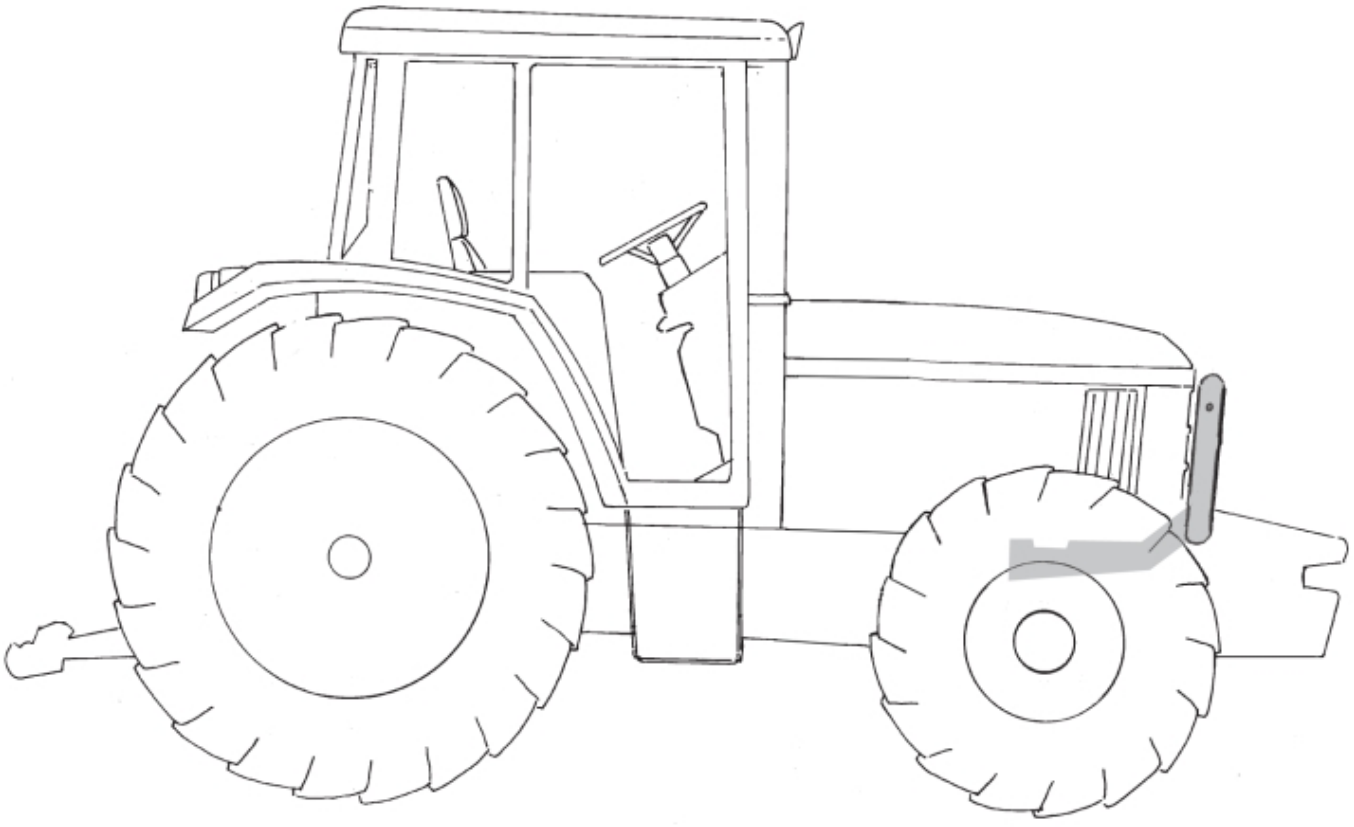

© 2025 Jost

Part assemblies Grille guard set

PartNo	Pos	Qty	Name	Specifications
14220089			Grille guard set	
338003	1	1 PCS	Grille guard LH	
338004	2	1 PCS	Grille guard RH	
335205	3	1 PCS	Tie rod	

© 2025 Jost