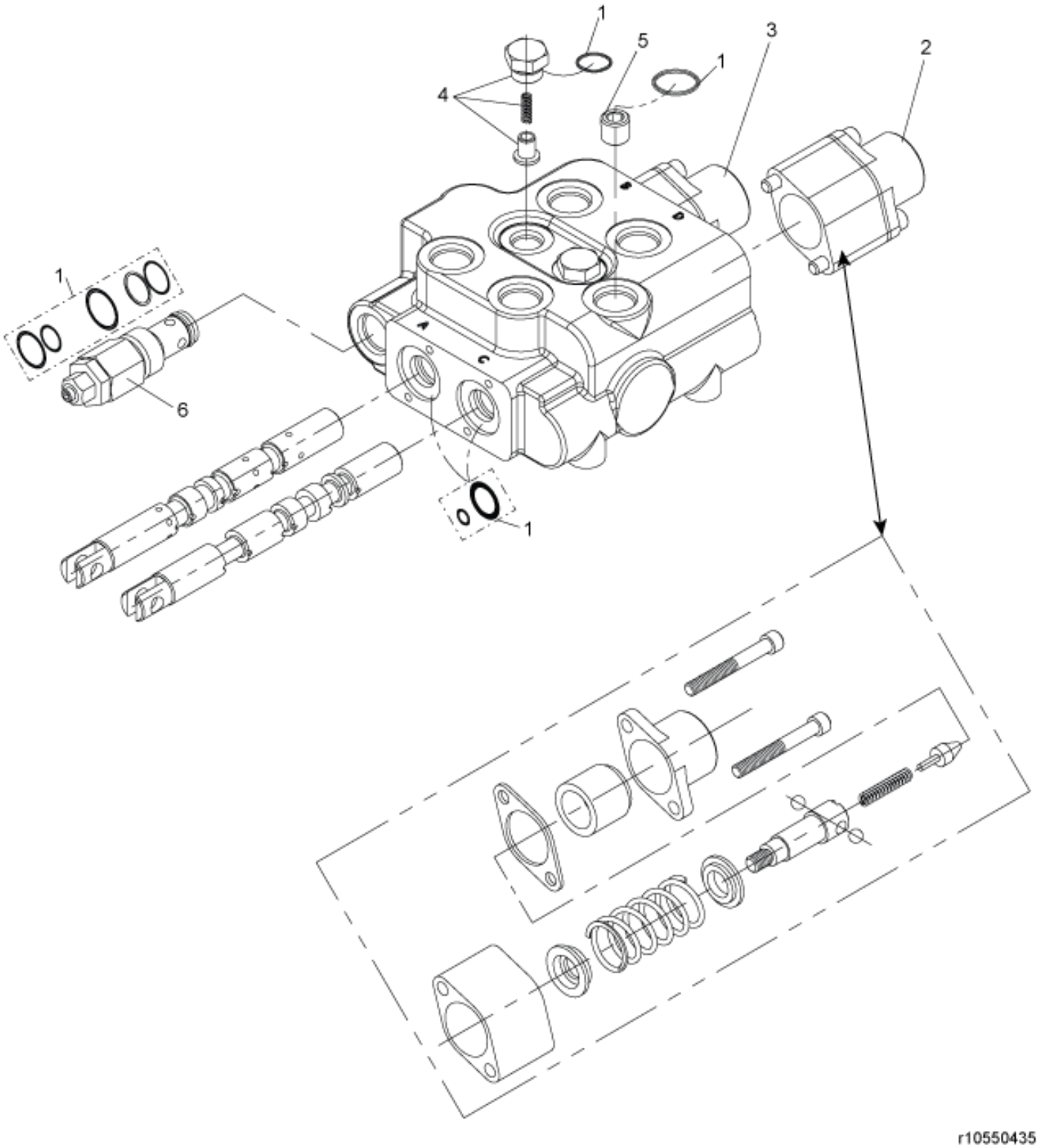

© 2025 Jost

Part assemblies	Valve assy.

PartNo	Pos	Qty	Name	Specifications
5039029	1	1	Seal kit	
5034248	2	1 PCS	Spool control	Regen
5034249	3	1 PCS	Spool control	Float position
5034254	4	2 PCS	Check valve cpl.	
5034255	5	1 PCS	Plug	Power Beyond 1/4"
5033909	6	1 PCS	Pressure relief valve	

© 2025 Jost