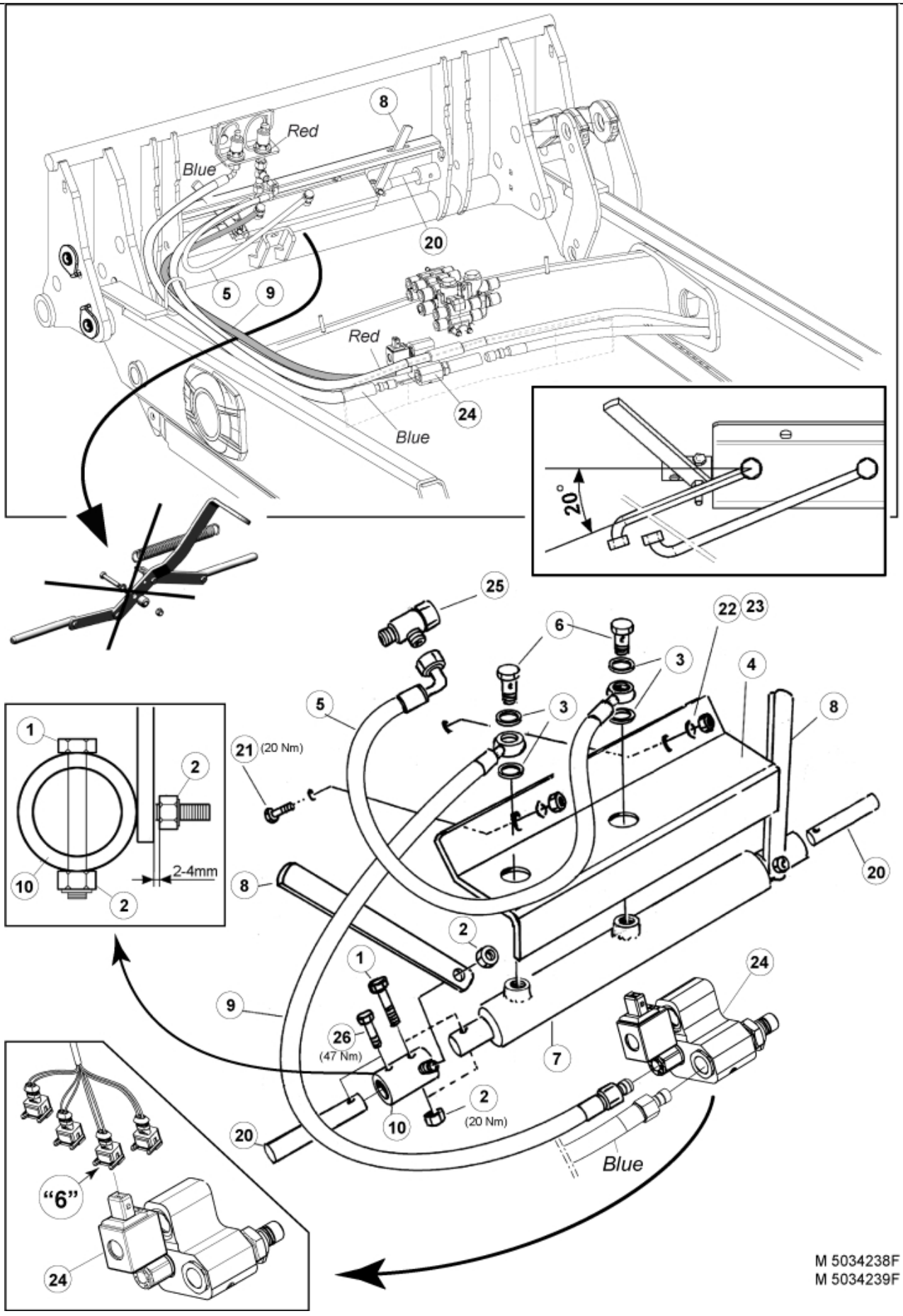
Red
Blue
8
20
5
9
Red
24
Blue
20°
25
6
22
23
3
4
5
3
8
1
2
21 (20 Nm)
2-4mm
10
2
20
8
2
1
9
24
26
(47 Nm)
7
10
2
(20 Nm)
20
Blue
"6"
24
M 5034238F
M 5034239F

© 2025 Jost

Part assemblies Locking kit

PartNo	Pos	Qty	Name	Specifications
5034238F			Locking kit	
5219046			• Locking kit	
5002055	1	2	•• Screw	M6S M8x40
5011553	2	4	•• Nut	M6M M8 Loc-king
5013856	3	4	•• Dowty washer	Tredo 1/4"
5219048	4	1	•• Protection plate	
60000143	5	1 PCS	•• Hose	1/4" L=550mm (9031170)
1120166	6	2	•• Banjo fitting	R1/4"
12713210	7	1	•• Cylinder	Ø25/16 L=370-590 Lock cyl.
5219049	8	2	•• Indicator	
60000135	9	1 PCS	•• Hose	1/4" L=1100mm (9031482)
5219246	10	2 PCS	•• Sleeve	
5219044	20	2	Pin	D=20mm
5002077	21	2	Screw	M6S 10x30
5011554	22	2	Nut	Loc-King M10
5013110	23	2	Washer	BRB 10.5x22x2
10550455	24	1 PCS	Valve	
5027454	25	1	L-coupling	
5002971	26	2	Screw	M6S 10x30 Drilock
5033992			Safety switch cpl.	Replaces 5033991

© 2025 Jost