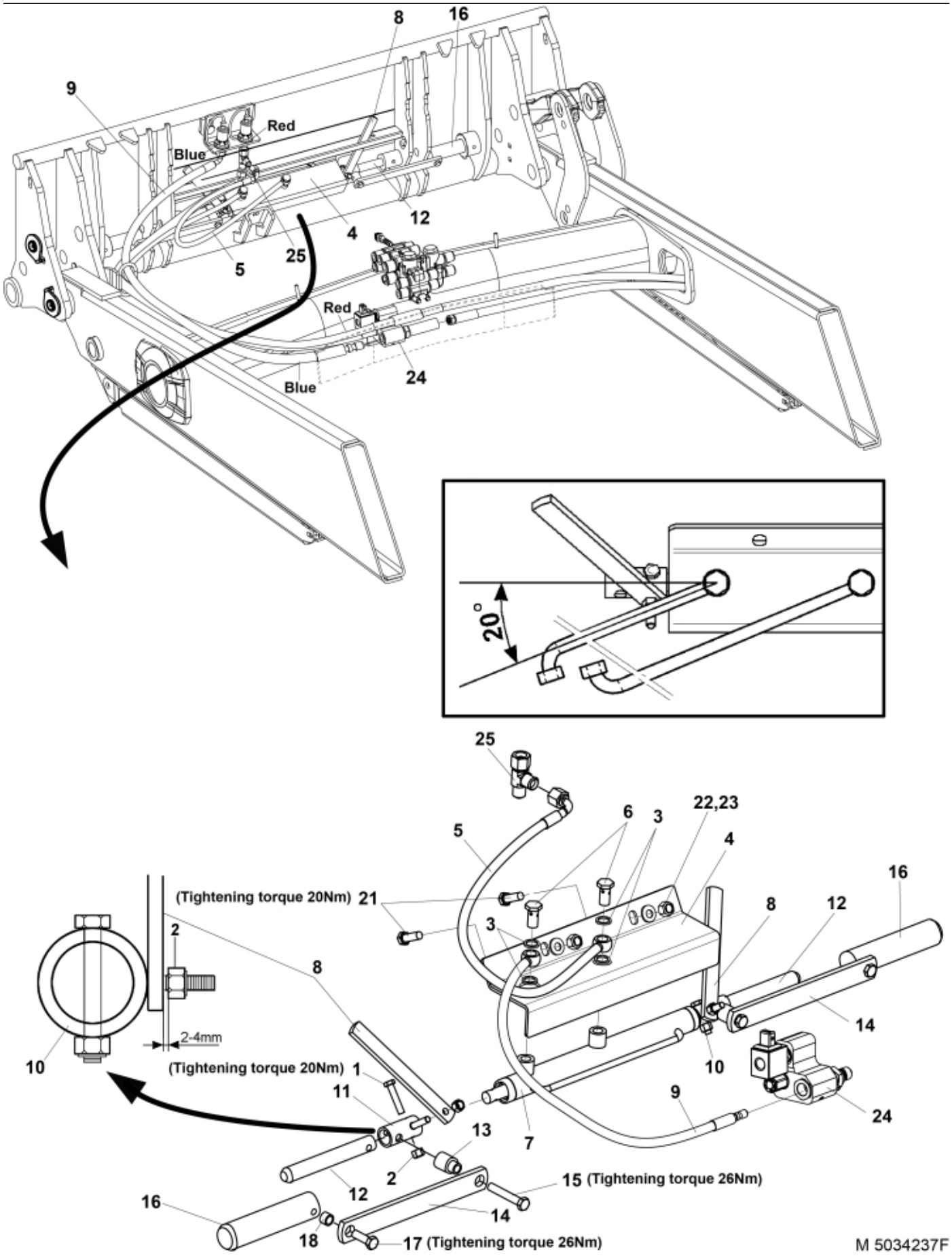
8
16
9
Red
Blue
12
4
25
5
Red
24
Blue
20°
25
22,23
6
3
5
4
16
(Tightening torque 20Nm)
21
8
12
2
3
14
8
2-4mm
10
10
(Tightening torque 20Nm)
1
11
9
24
13
7
2
15 (Tightening torque 26Nm)
12
16
14
18
17 (Tightening torque 26Nm)
M 5034237F

© 2025 Jost

Part assemblies Locking kit

PartNo	Pos	Qty	Name	Specifications
5034237F			Locking kit	
5034089			Locking kit	
5002055	1	2	•• Screw	M6S M8x40
5011553	2	4	•• Nut	M6M M8 Loc-king
5013856	3	4	•• Dowty washer	Tredo 1/4"
5219048	4	1	•• Protection plate	
60000143	5	1 PCS	•• Hose	1/4" L=550mm (9031170)
1120166	6	2	•• Banjo fitting	R1/4"
12713210	7	1	•• Cylinder	Ø25/16 L=370-590 Lock cyl.
5219049	8	2	•• Indicator	
60000286	9	1 PCS	•• Hose	1/4" L=1400mm (9031484)
5034092	10	1 PCS	•• Sleeve RH	
5034093	11	1 PCS	•• Sleeve LH	
5219044	12	2	•• Pin	D=20mm
5034090	13	2 PCS	•• Spacer	
5220566	14	2 PCS	•• Extension piece	
5002993	15	2 PCS	•• Screw	M10x60 Driloc
5220564	16	2 PCS	• Pin	D=35mm
5002972	17	2	• Screw	M6S 10x40 Driloc
5219100	18	2	• Spacer	
5002077	21	2	• Screw	M6S 10x30
5011554	22	2	• Nut	Loc-King M10
5013110	23	2	• Washer	BRB 10.5x22x2
10550455	24	1 PCS	• Valve	
5027454	25	1	• L-coupling	
5033992			Safety switch cpl.	Replaces 5033991

© 2025 Jost