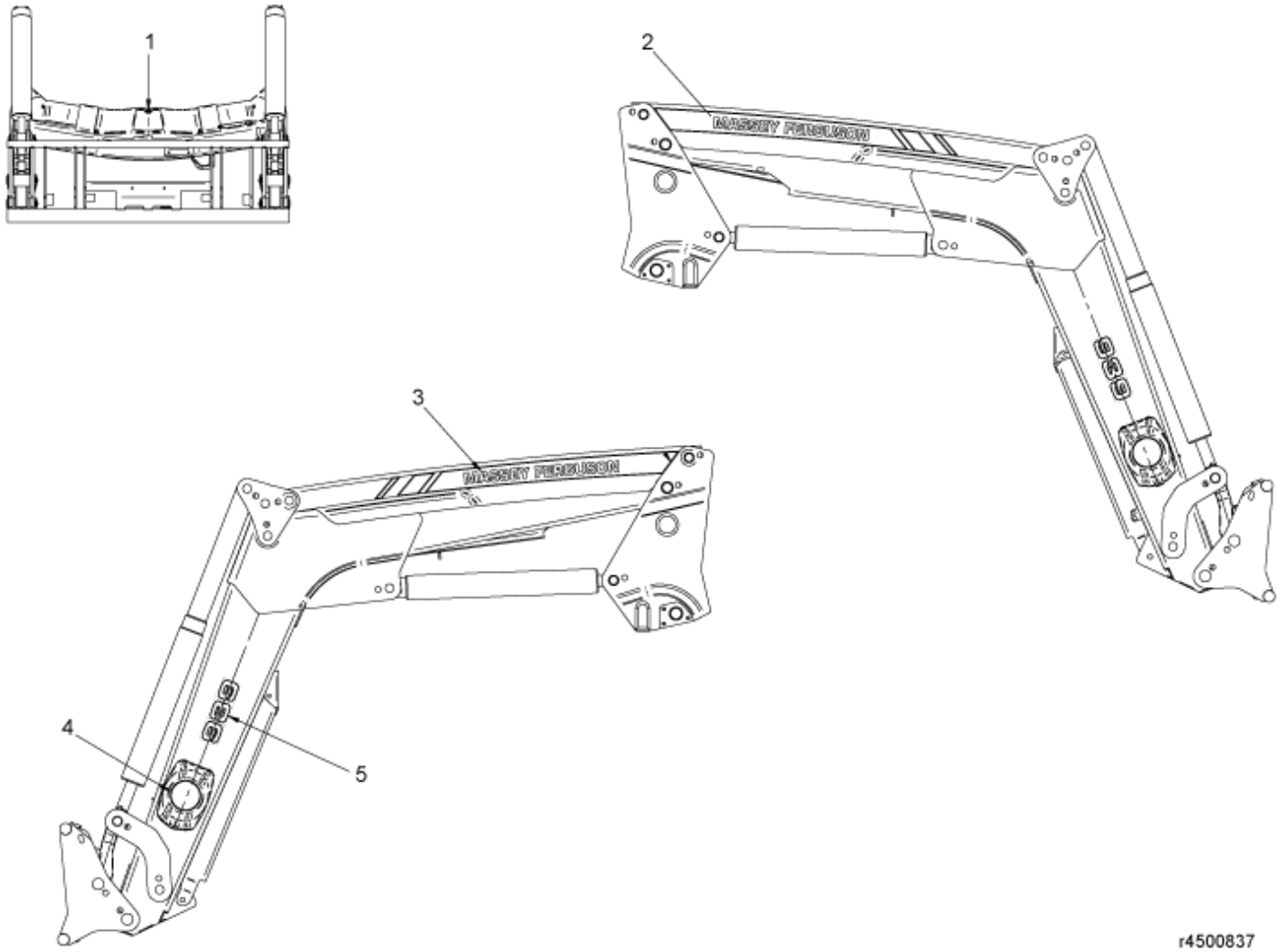

© 2025 Jost

Description	AGCO MK3
Part assemblies	Decal kit MF939

PartNo	Pos	Qty	Name	Specifications
11134980	1	1 PCS	Trapezoid decal	
11134976	2	1 PCS	Decal Brand, RH	
11134975	3	1 PCS	Decal Brand, LH	
11134979	4	2 PCS	Decal, Circular	MF
11136228	5	2 PCS	Decal, Model	

© 2025 Jost