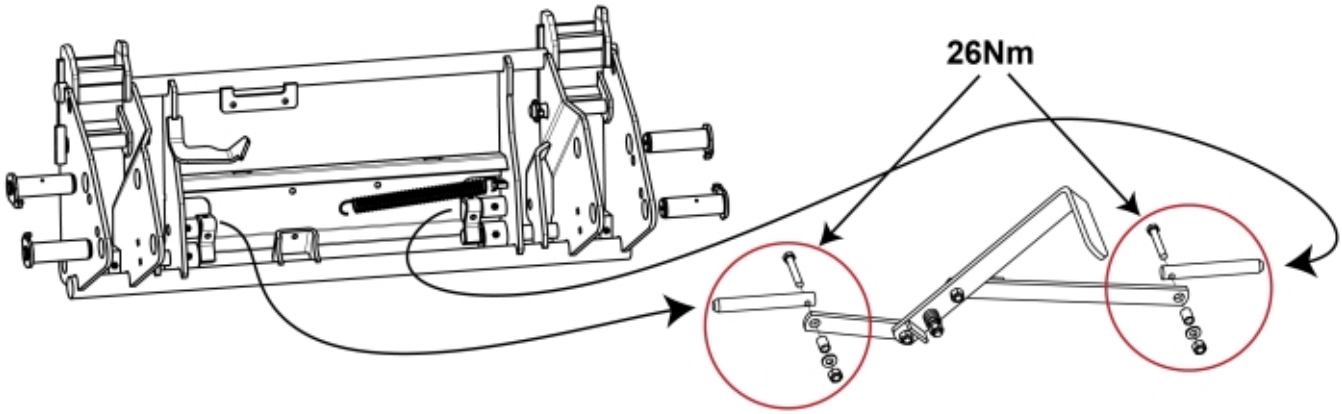

4500858

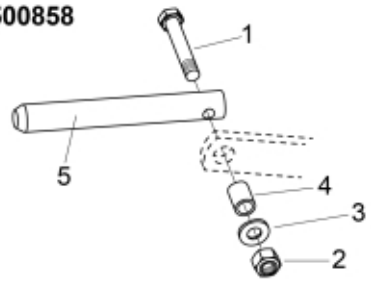

4500859

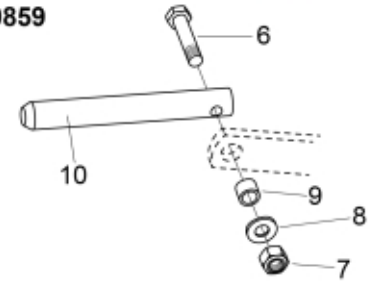

4500866

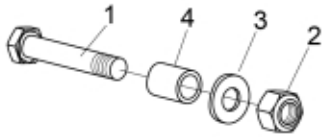

4500860

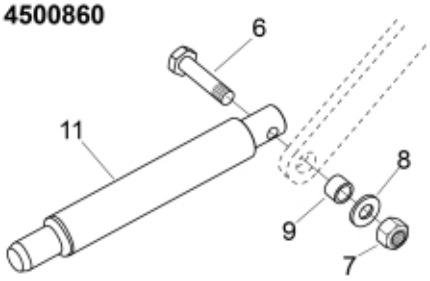

4500861

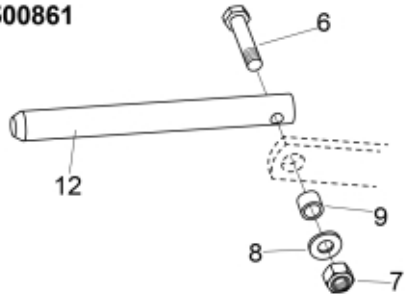

4500867

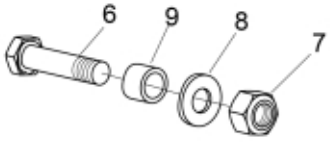

4500862

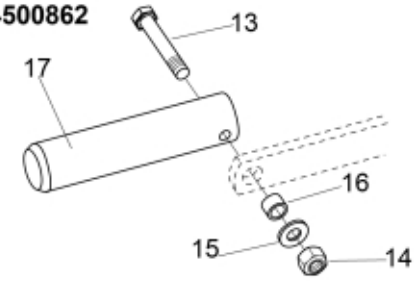

4500863

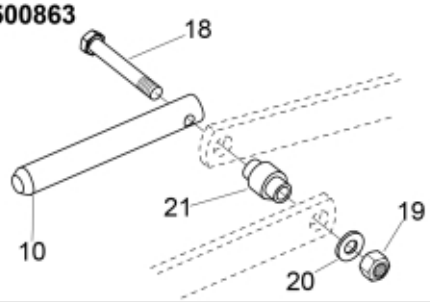

4500868

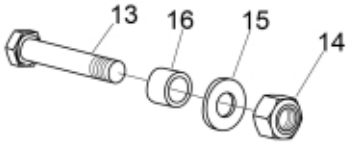

4500864

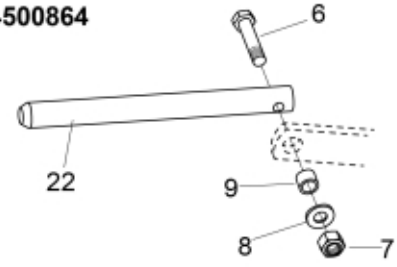

4500865

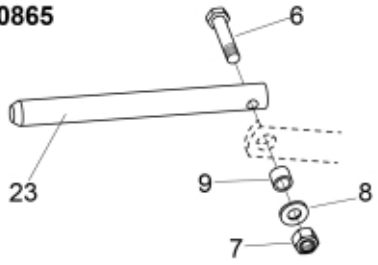

4500869

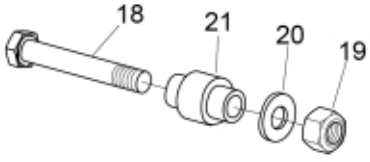

© 2025 Jost

Part assemblies		Pin kit		
Specification		Specification: Kit includes 1x Pin and 1x Screw kit		
PartNo	**Pos**	**Qty**	**Name**	**Specifications**
4500859		1	Pin kit	Kit includes 1x Pin and 1x Screw kit
4500867		1	• Screw kit	Included in Pin kit
5002985	6	1 PCS	•• Screw	M6S 10x45
5011554	7	1	•• Nut	Loc-King M10
5013110	8	1	•• Washer	BRB 10.5x22x2
5219100	9	1	•• Spacer	
5219044	10	1	• Pin	D=20mm

© 2025 Jost