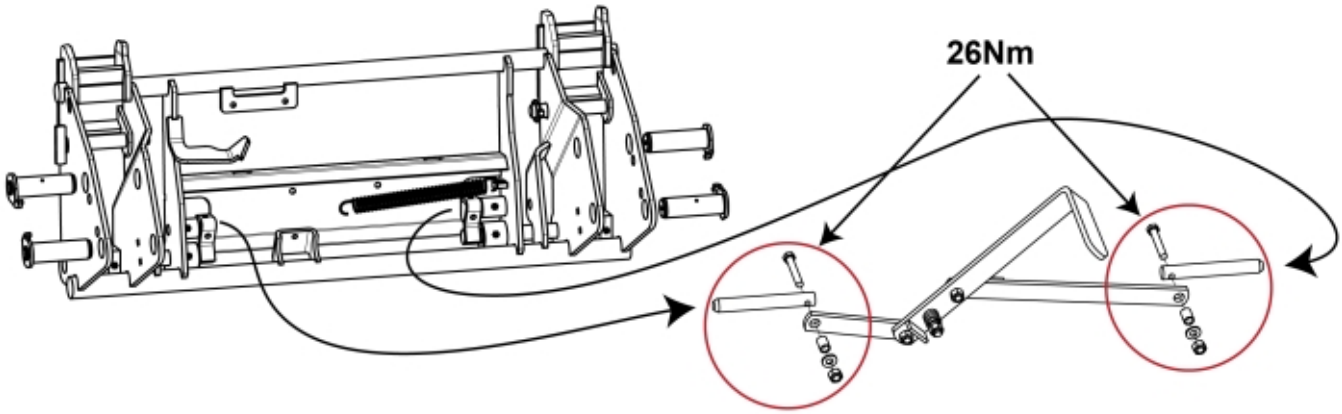

4500858

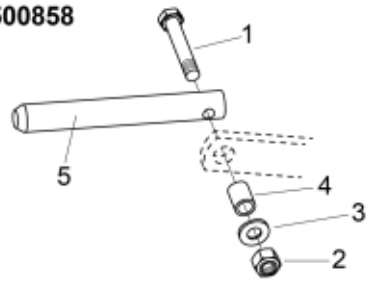

4500859

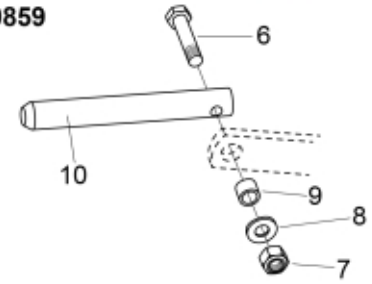

4500866

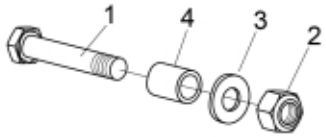

4500860

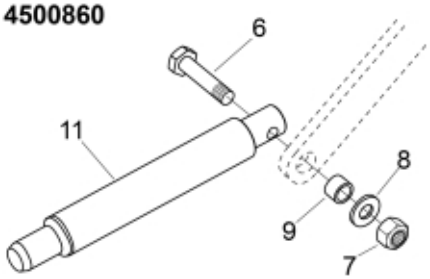

4500861

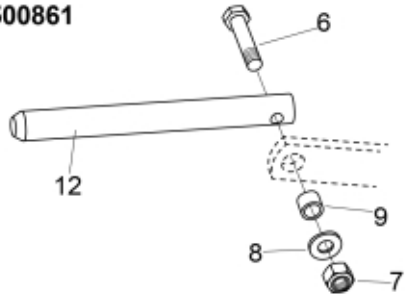

4500867

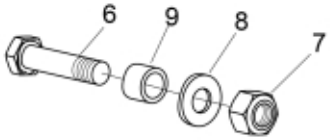

4500862

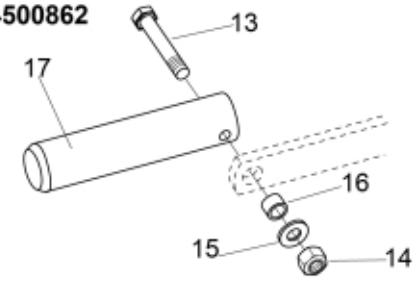

4500863

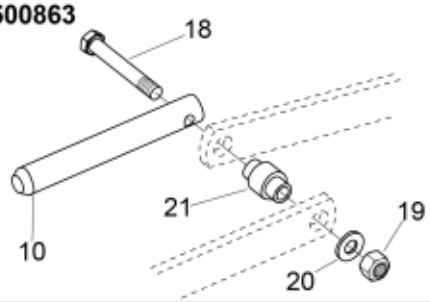

4500868

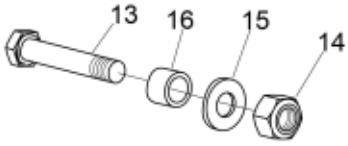

4500864

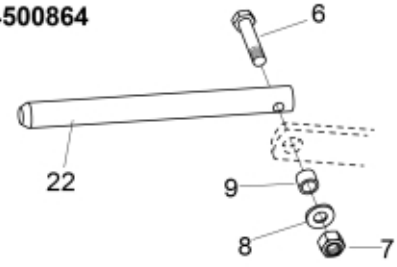

4500865

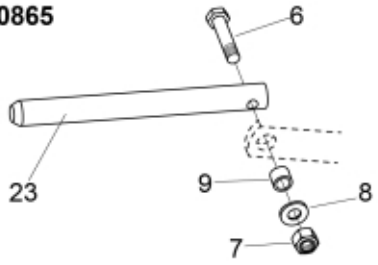

4500869

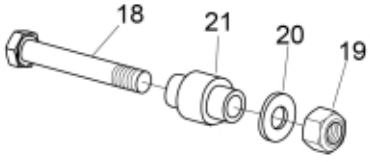

© 2025 Jost

Part assemblies		Pin kit		
Specification		Specification: Includes 4500869		
PartNo	**Pos**	**Qty**	**Name**	**Specifications**
4500863		1 PCS	Pin kit	Includes 4500869
5219044	10	1	• Pin	D=20mm
4500869			• Screw kit	Included in Pin kit
5002082	18	1	•• Screw	M6S M10x70 (8.8)
5011554	19	1	•• Nut	Loc-King M10
5013110	20	1	•• Washer	BRB 10.5x22x2
5220565	21	1 PCS	•• Spacer	

© 2025 Jost