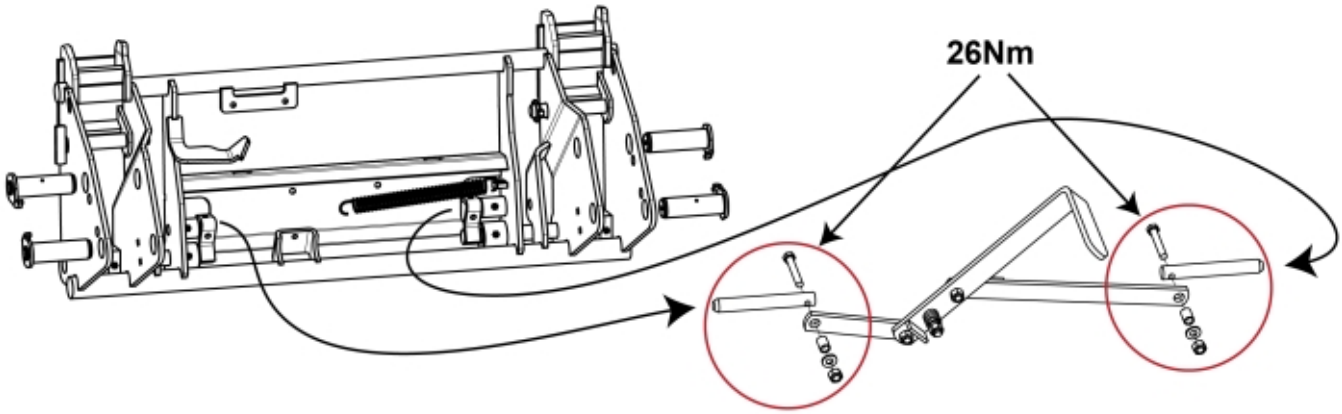

4500858

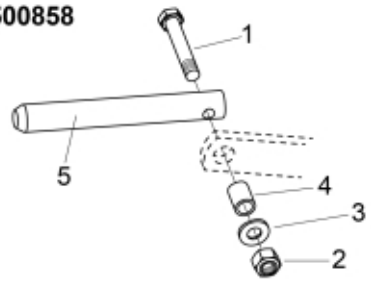

4500859

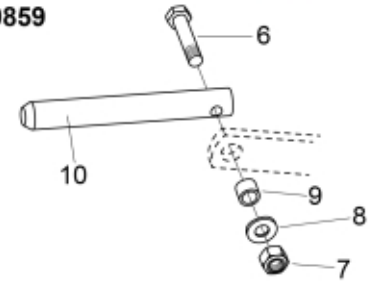

4500866

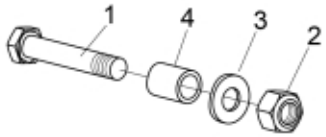

4500860

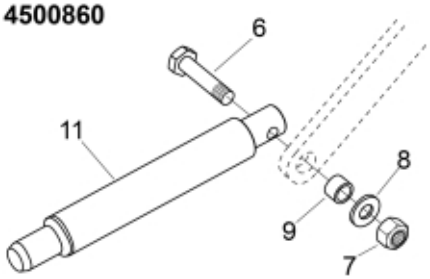

4500861

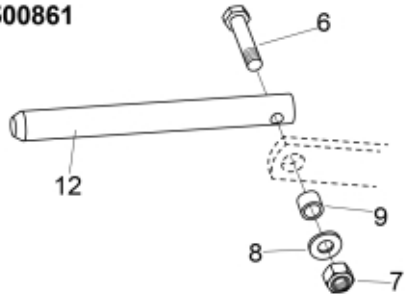

4500867

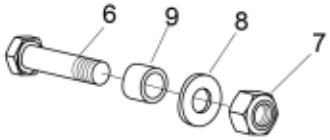

4500862

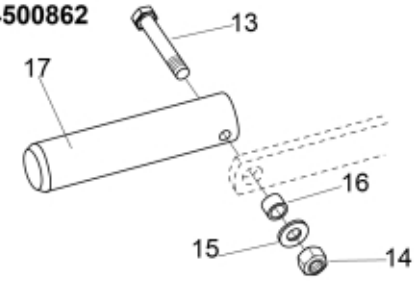

4500863

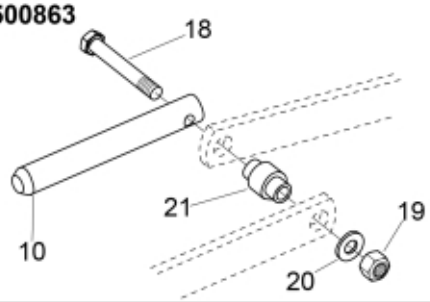

4500868

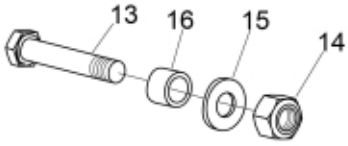

4500864

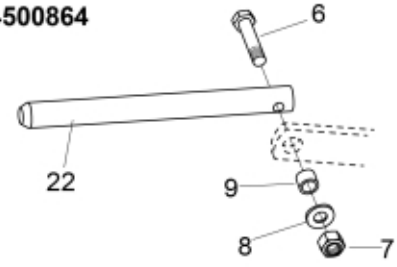

4500865

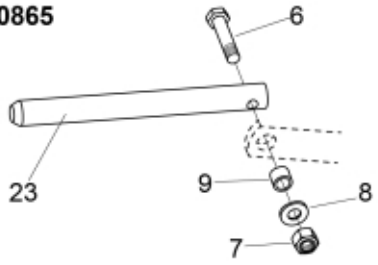

4500869

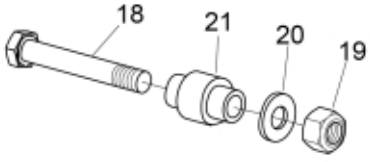

© 2025 Jost

Part assemblies		Screw kit		
Specification		Specification: Included in Pin kit		
PartNo	**Pos**	**Qty**	**Name**	**Specifications**
4500868		1 PCS	Screw kit	Included in Pin kit
5002080	13	1	• Screw	M6S 10 x 60
5011554	14	1	• Nut	Loc-King M10
5013110	15	1	• Washer	BRB 10.5x22x2
5219100	16	1	• Spacer	

© 2025 Jost