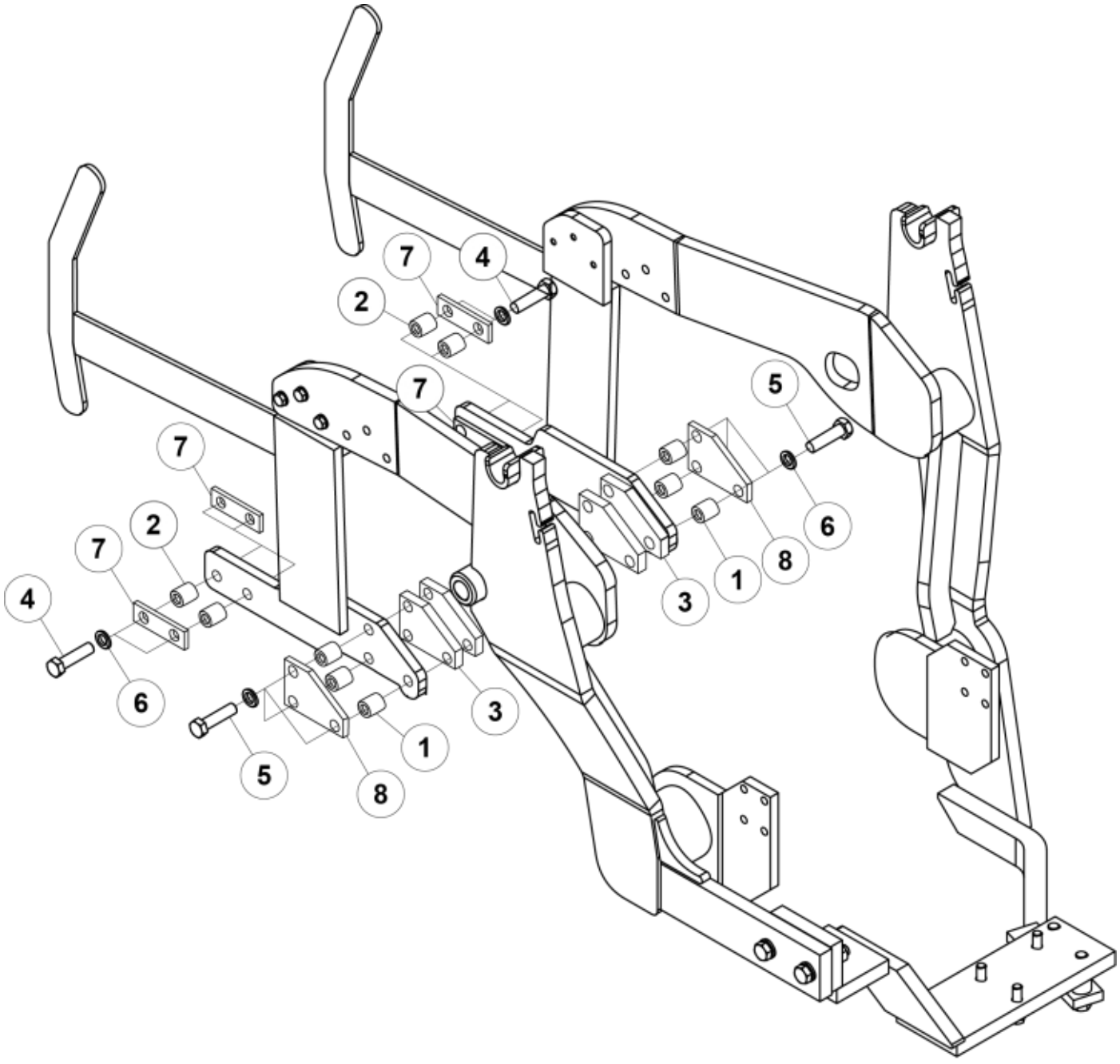

M 10415830

© 2025 Jost

Part assemblies Additional kit

PartNo	Pos	Qty	Name	Specifications
10415830		1 PCS	Additional kit	
60041164	1	6 PCS	Spacer tube	
60041162	2	4 PCS	Spacer tube	
10414383	3	2 PCS	Spacer	
5001159	4	4 PCS	Screw	U6S 5/8" UNC x 83 (8.8)
5001162	5	6 PCS	Screw	U6S 5/8" UNC x 102 (8.8)
5013105	6	10	Washer	BRB 17 x 30 x 3 300HV
60003204	7	2 PCS	Spacer	
60003203	8	2 PCS	Spacer	

© 2025 Jost