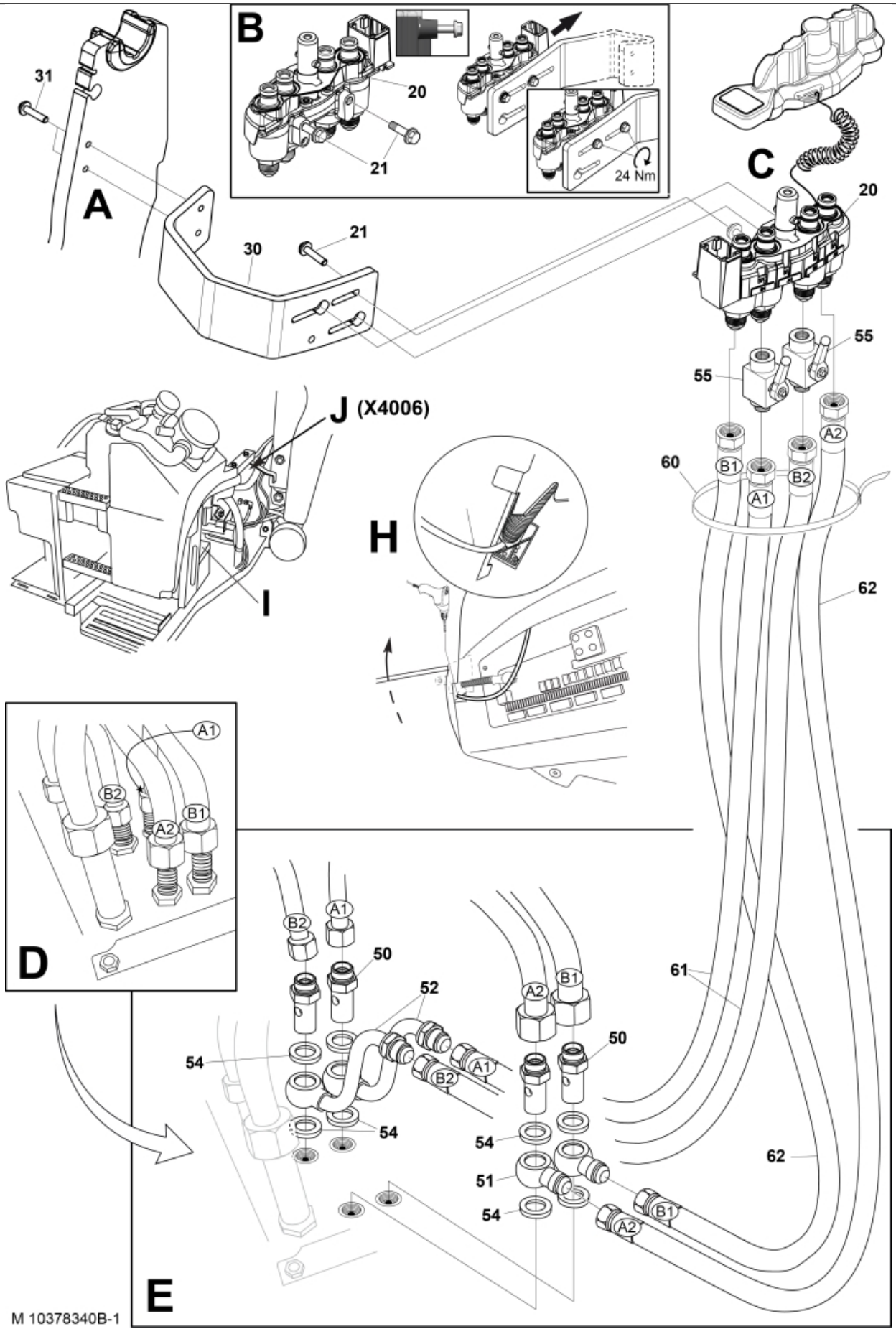
A
B
C
D
E
H
I
J (X4006)
31
20
21
24 Nm
30
55
60
62
61
50
52
54
51
A1
A2
B1
B2
M 10378340B-1

© 2025 Jost

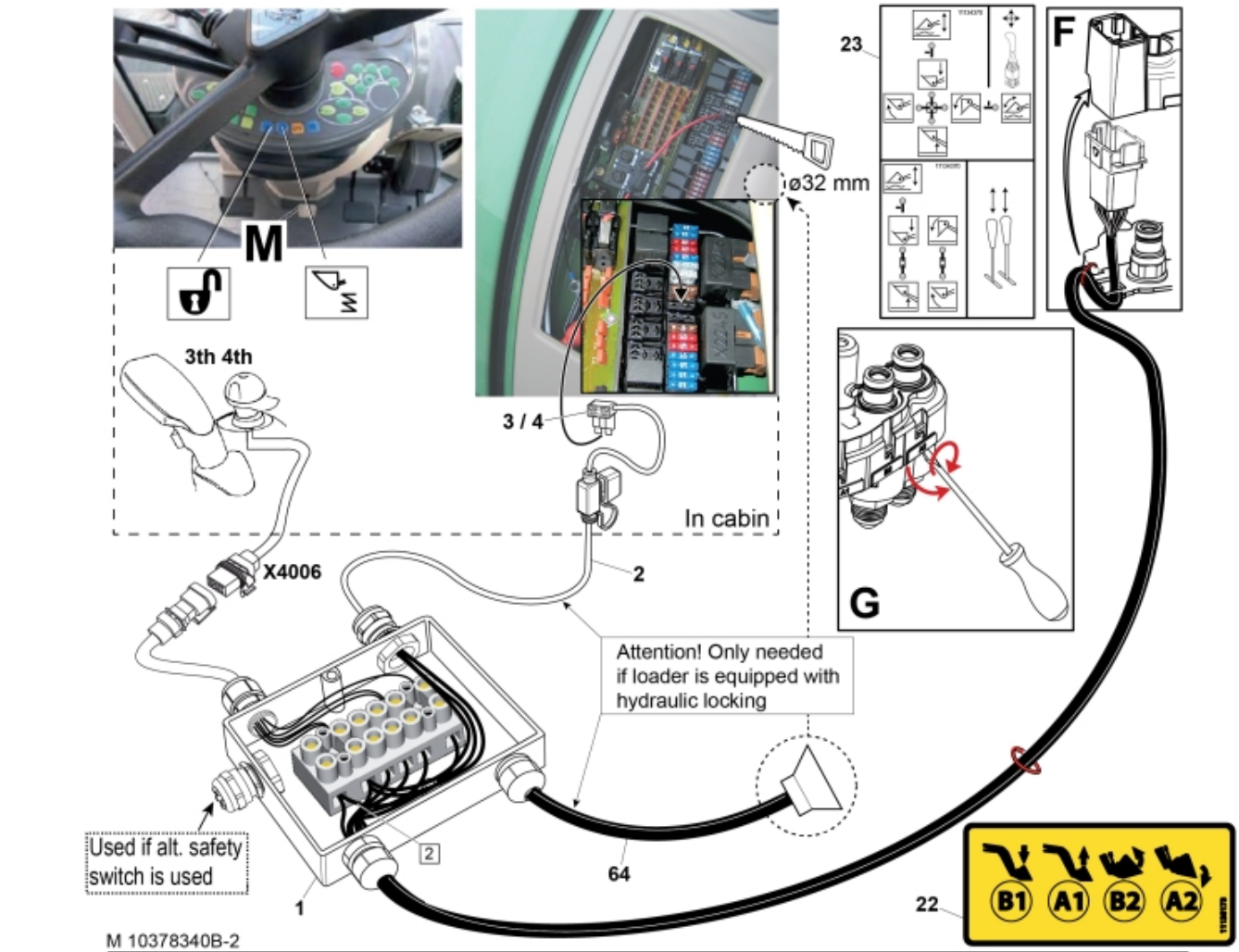
M
3th 4th
3 / 4
In cabin
X4006
2
Attention! Only needed
if loader is equipped with
hydraulic locking
Used if alt. safety
switch is used
1
64
ø32 mm
23
F
G
22
B1
A1
B2
A2

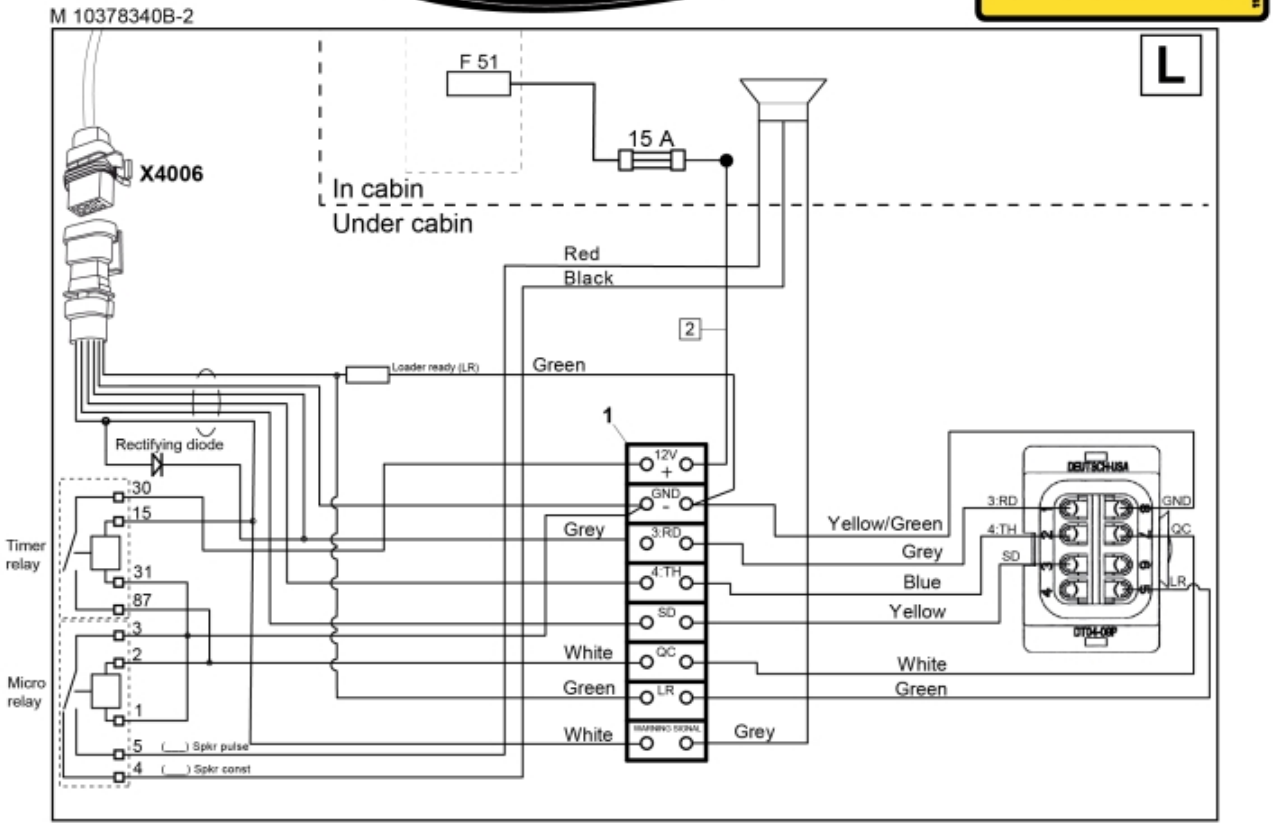
M 10378340B-2
L
F 51
15 A
X4006
In cabin
Under cabin
Red
Black
2
Loader ready (LR)
Green
1
Rectifying diode
12V +
GND -
3:RD
4:TH
SD
QC
LR
WARNING SIGNAL
Grey
White
Green
White
Grey
Timer relay
Micro relay
30
15
31
87
3
2
1
5
4
(___) Spkr pulse
(___) Spkr const
Yellow/Green
Grey
Blue
Yellow
White
Green
DEUTSCH-USA
DTDH-06P

© 2025 Jost

Alternative safety switch installation:

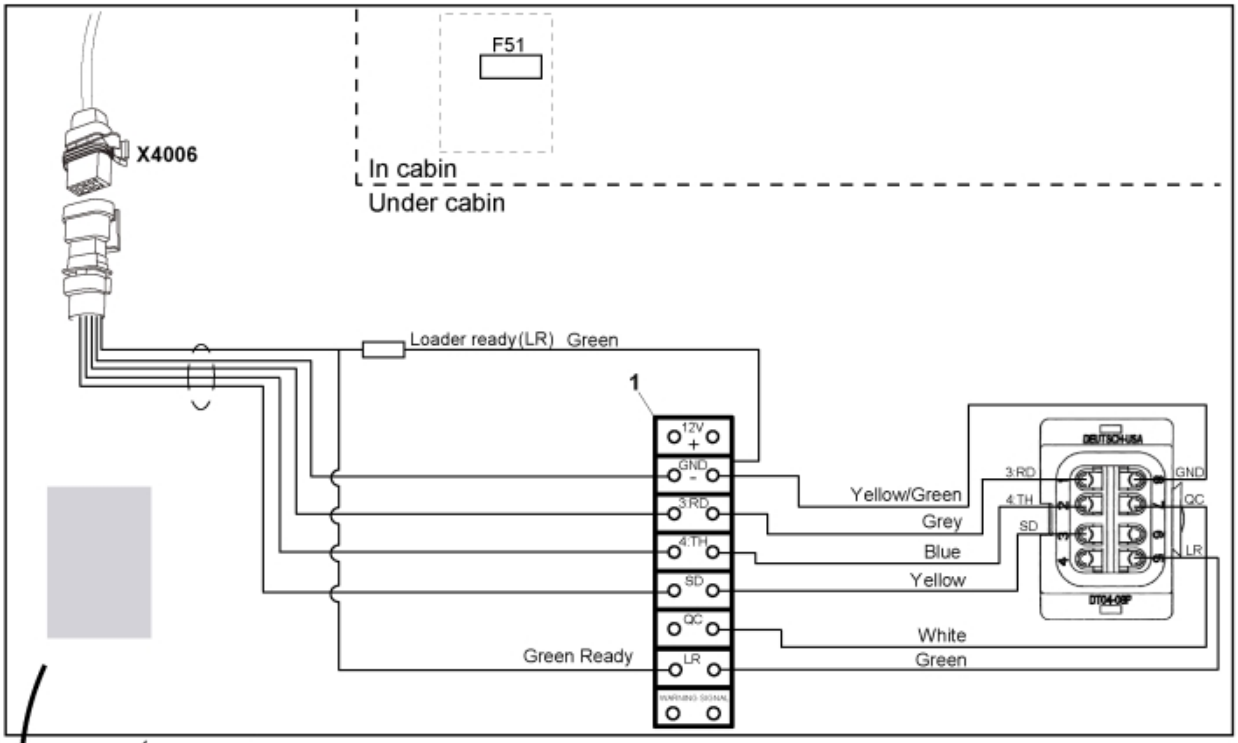

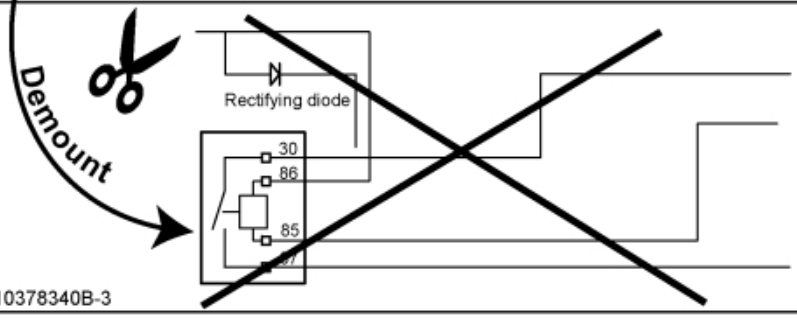

Note! Remove speaker and relays. They are only used as extra safety for Hydraulic locking (when safety switch don´t exist)

M 10378340B-3

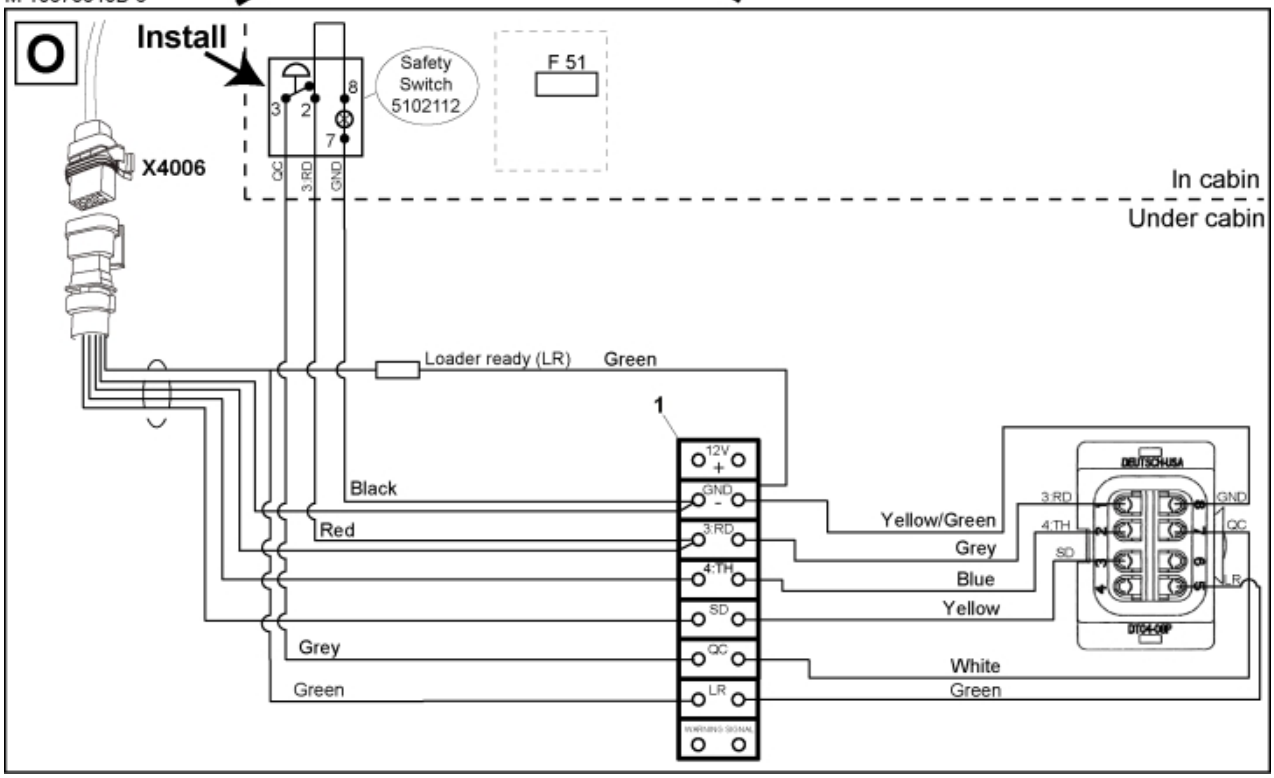

© 2025 Jost

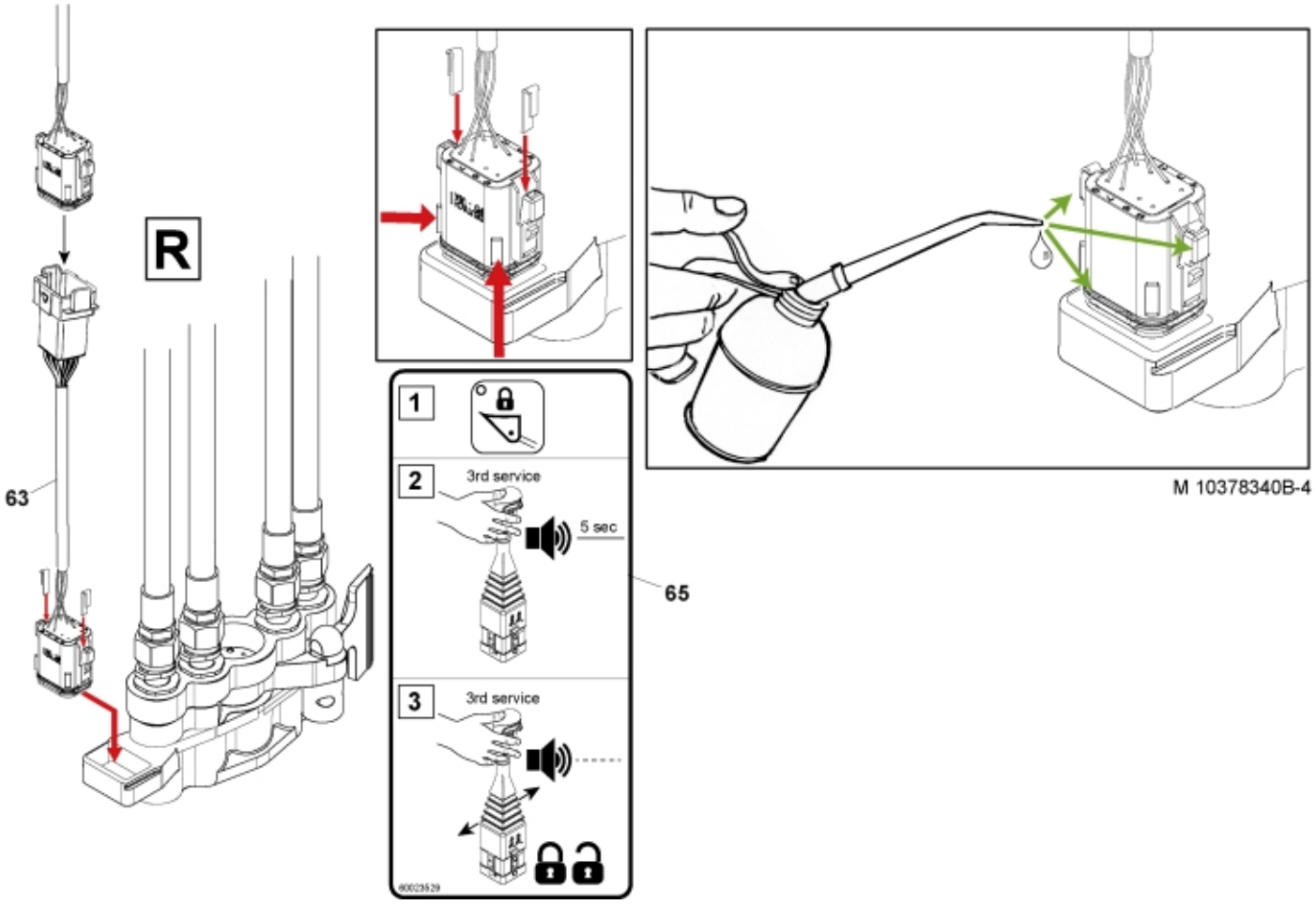

M 10378340B-4

© 2025 Jost

Part assemblies Hose kit

PartNo	Pos	Qty	Name	Specifications
10378340B			Hose kit	
60016150	1	1	Electr. Cable	
5102185	2	1 PCS	Harness	
5050852	3	1 PCS	Fuse holder	
5050853	4	1 PCS	Fuse holder	
5033919		1	Multi coupling	
5044990	20	1	• Base MC4 J. 7/8"	Replaces 5044952
5006018	21	2	• Screw	M6SF M8X25
11135173	22	1	• Decal	
11134370	23	1	• Decal	
10391712	30	1	Valve bracket	
5005999	31	2	Screw	M6SF M10X45
60028069	50	4 PCS	Hollow screw	
11120645	51	2	Banjo fitting	M22 7/8 UNF JIC
11120641	52	2 PCS	Banjo fitting	
5013614	54	8 PCS	Copper Washer	22,2 x 27,9 x 1,5
5033949	55	2	Shut-off valve	
5033606	60	6	Cable tie	7,5 x 385
9031662	61	2 PCS	Hose	7/8" JICx1050
9031663	62	2 PCS	Hose	7/8" JICx1250
60011915	63	1	Wiring harness	
60016353	64	1	Electr. Cable	
60023529	65	1 PCS	Decal	

© 2025 Jost