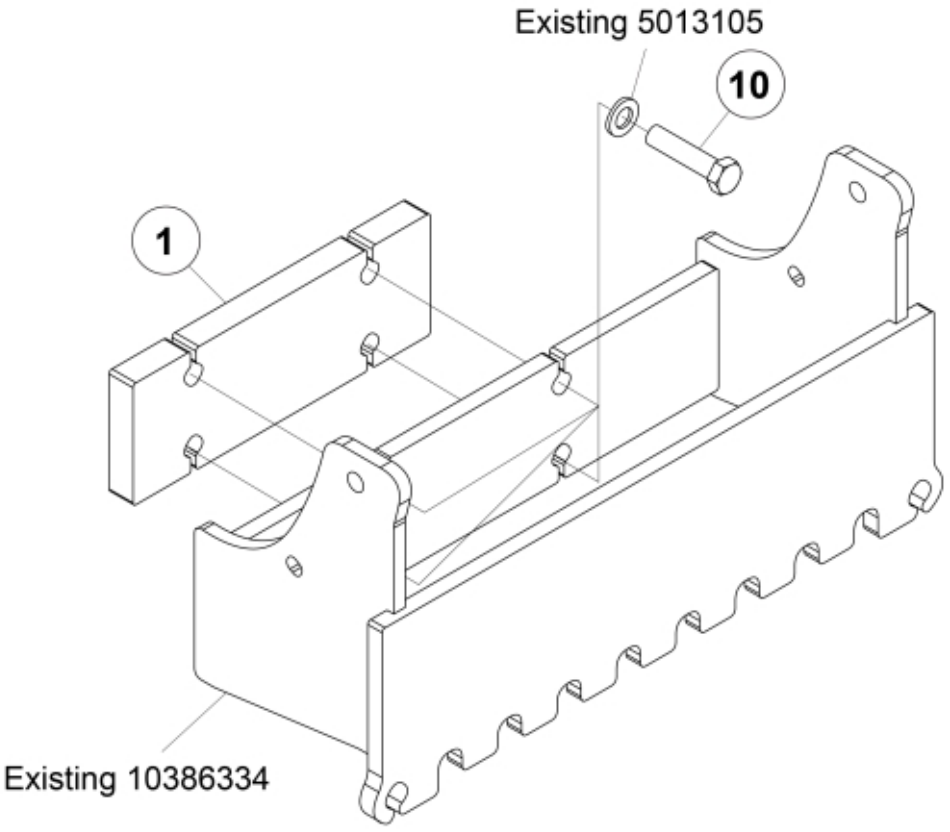

© 2025 Jost

Part assemblies	Grille guard set

PartNo	Pos	Qty	Name	Specifications
10417030		1 PCS	Grille guard set	
10417029	1	1 PCS	Plate	
22000099		1 PCS	Box	
5002755	10	4 PCS	• Screw	M6S_ M16 x 1,5 x 70 (8.8)

© 2025 Jost