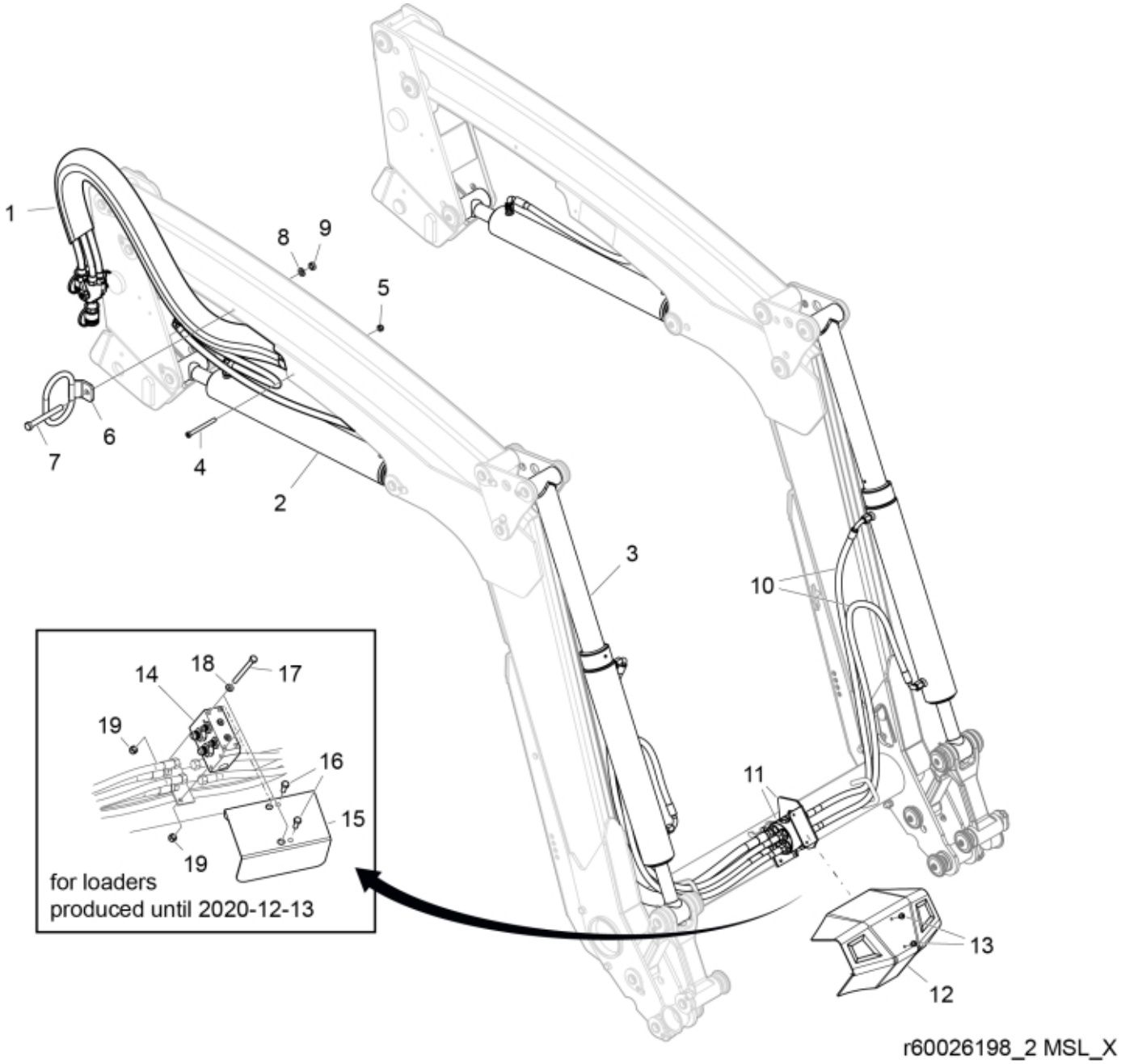

r60026198_2 MSL_X

© 2025 Jost

Description	Versa-X
Part assemblies	Hydraulics

PartNo	Pos	Qty	Name	Specifications
- - -	1	1	Main hose kit	See separate part list
60048005-1	2	2 PCS	Lift Cylinder	Glossy Black. Replaces 12727010-1
60047990-1	3	2 PCS	Tilt Cylinder	Glossy Black For loaders produced from 2021/01/15
12718110-1	3	2	Tilt Cylinder	Glossy Black For loaders produced until 2021/01/14
5004955	4	1	Screw	MC6S 6x85
5011552	5	1	Locking nut	M6 Locking
5221966	6	1	Hose guide	
5002064	7	1	Screw	M6S 8x80
5013101	8	1	Washer	BRB 8,4 x 16
5011553	9	1	Nut	M6M M8 Loc-king
9031723	10	4	Hose	3/8"
4501182	11	1	CVU Basic MSL	12/14/2020 12:00:00 AM For loaders produced from 2020/12/14
60057476	12	1	Plastic cover	For loaders produced from 2020/12/14
5051982	13	2	Screw	M6x8 For loaders produced from 2020/12/14
60009544	14	1	Relief valve cpl.	2/1/2016 12:00:00 AM For loaders produced until 2020/12/13
60009959	15	1	Protection plate	replaces 5221561 For loaders produced until 2020/12/13
5002060	16	2	Screw	M6S M8x12 (8,8) For loaders produced until 2020/12/13
5002978	17	2	Screw	M6S 8x129 For loaders produced until 2020/12/13
5013101	18	2	Washer	BRB 8,4 x 16 For loaders produced until 2020/12/13
5011921	19	2	Nut	M6MF M8 For loaders produced until 2020/12/13

© 2025 Jost