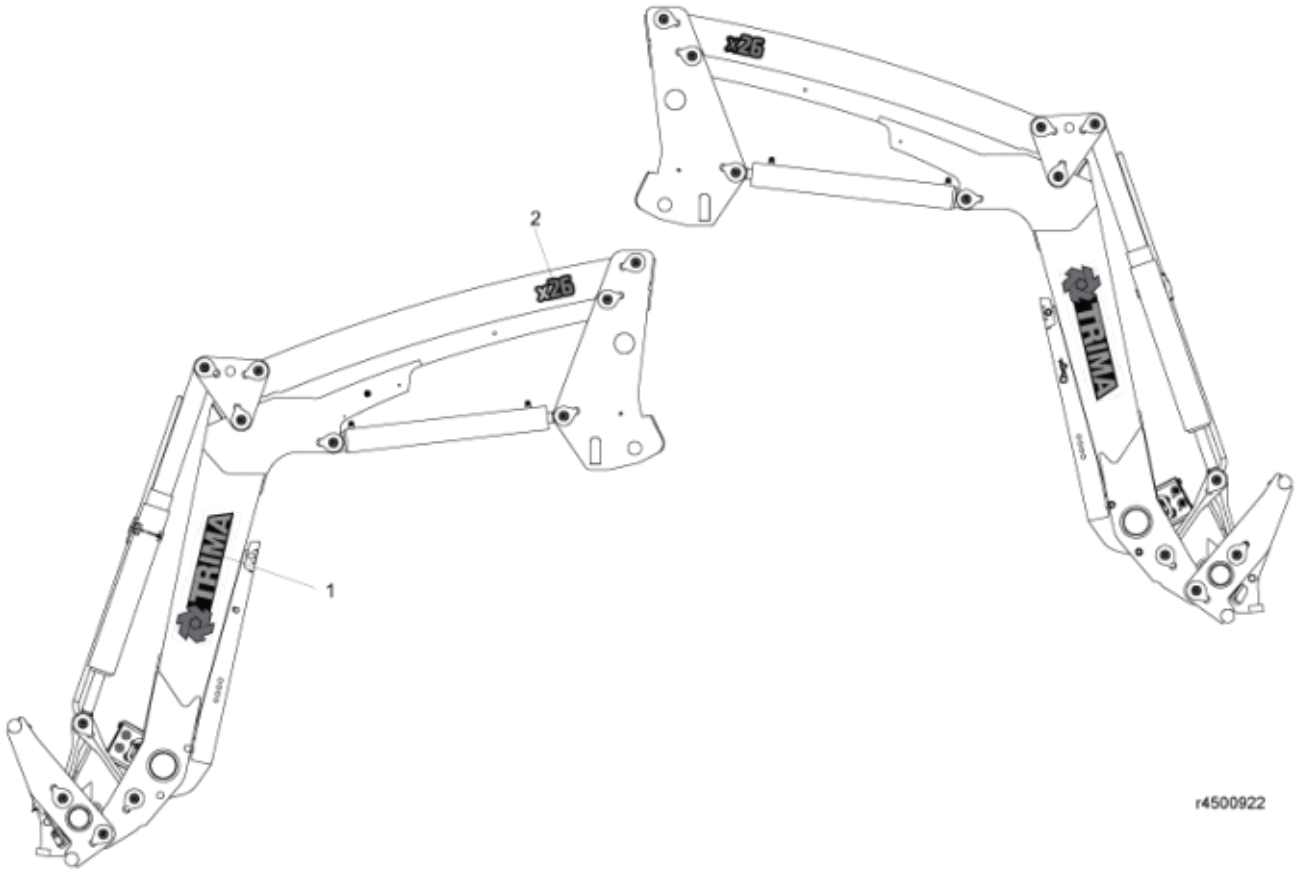

© 2025 Jost

Description	Versa-X
Part assemblies	Decal kit X26

PartNo	Pos	Qty	Name	Specifications
11135054	1	2 PCS	Decal, Brand	
11136689	2	2 PCS	Decal, Model	

© 2025 Jost