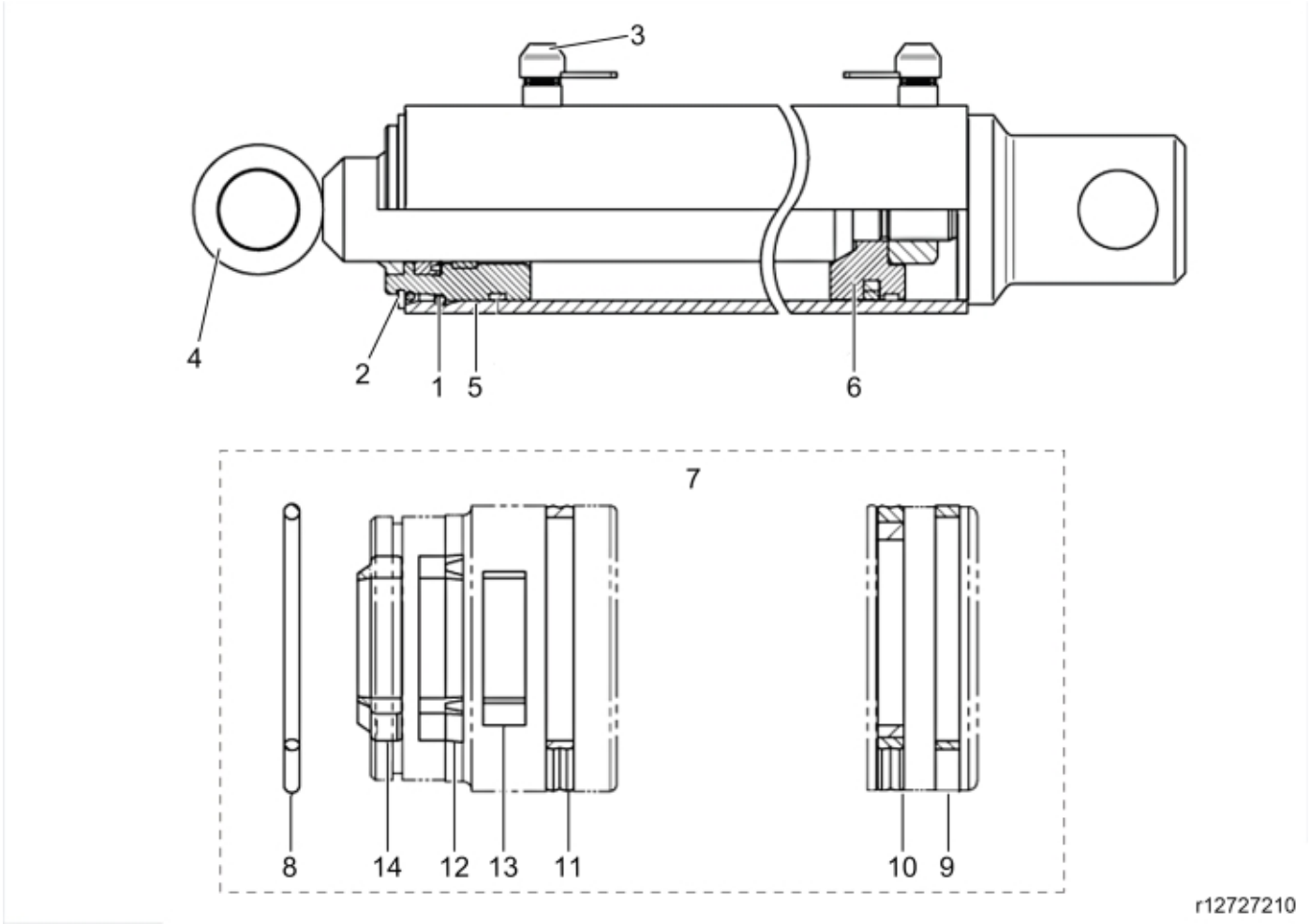

© 2025 Jost

Description	65/40
Part assemblies	Cylinder

PartNo	Pos	Qty	Name	Specifications
5016668	1	1	Retaining ring	
5016608	2	1	Circlip	
5028083	3	2	Plug	
12727213	4	1	Piston rod	
12716111	5	1	Bearing	
12707212	6	1	Piston	D70/40
5033703	7	1	Seal kit	
5037242	8	1	• O-ring	58,74 x 3,53
5040012	9	1	• Guide ring	65/60 x 5,5
5040022	10	1	• Piston seal	65/49,5 x 6,3
5039002	11	1	• Cover seal	65 x 59,6 x 6,2
5038254	12	1	• Seal	40/50x10
5040010	13	1	• Guide ring	40/45x9,7
5038101	14	1	• Wiper	40/50x7/10

© 2025 Jost