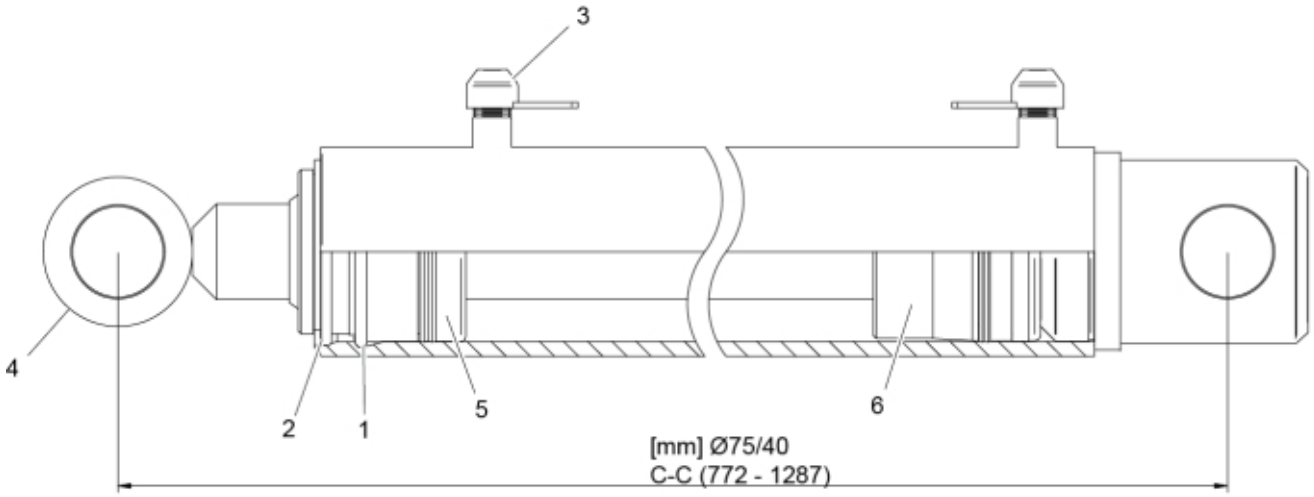

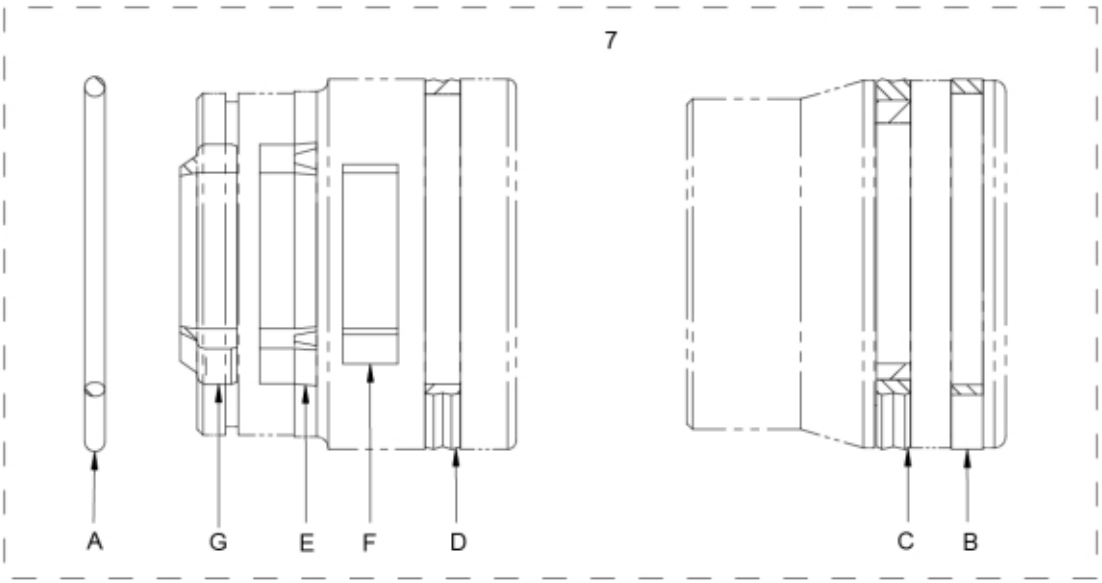

r12727410

© 2025 Jost

Description	65/32
Part assemblies	Cylinder
Specification	Specification: Glossy Black

PartNo	Pos	Qty	Name	Specifications
5016668	1	1	Retaining ring	
5016608	2	1	Circlip	
5028083	3	2	Plug	
12727413	4	1	Piston rod	
12716111	5	1	Bearing	
12707512	6	1	Piston	D75
5033705	7	1	Seal kit	
5037239	A	1	• O-ring	68.26x3x53
5040014	B	1	• Guide ring	75/70x5.5
5040024	C	1	• Piston seal	75/59.5x6.3
5039004	D	1	• Cover seal	75 x 69.6 x 6.2
5038254	E	1	• Seal	40/50x10
5040010	F	1	• Guide ring	40/45x9,7
5038101	G	1	• Wiper	40/50x7/10

© 2025 Jost