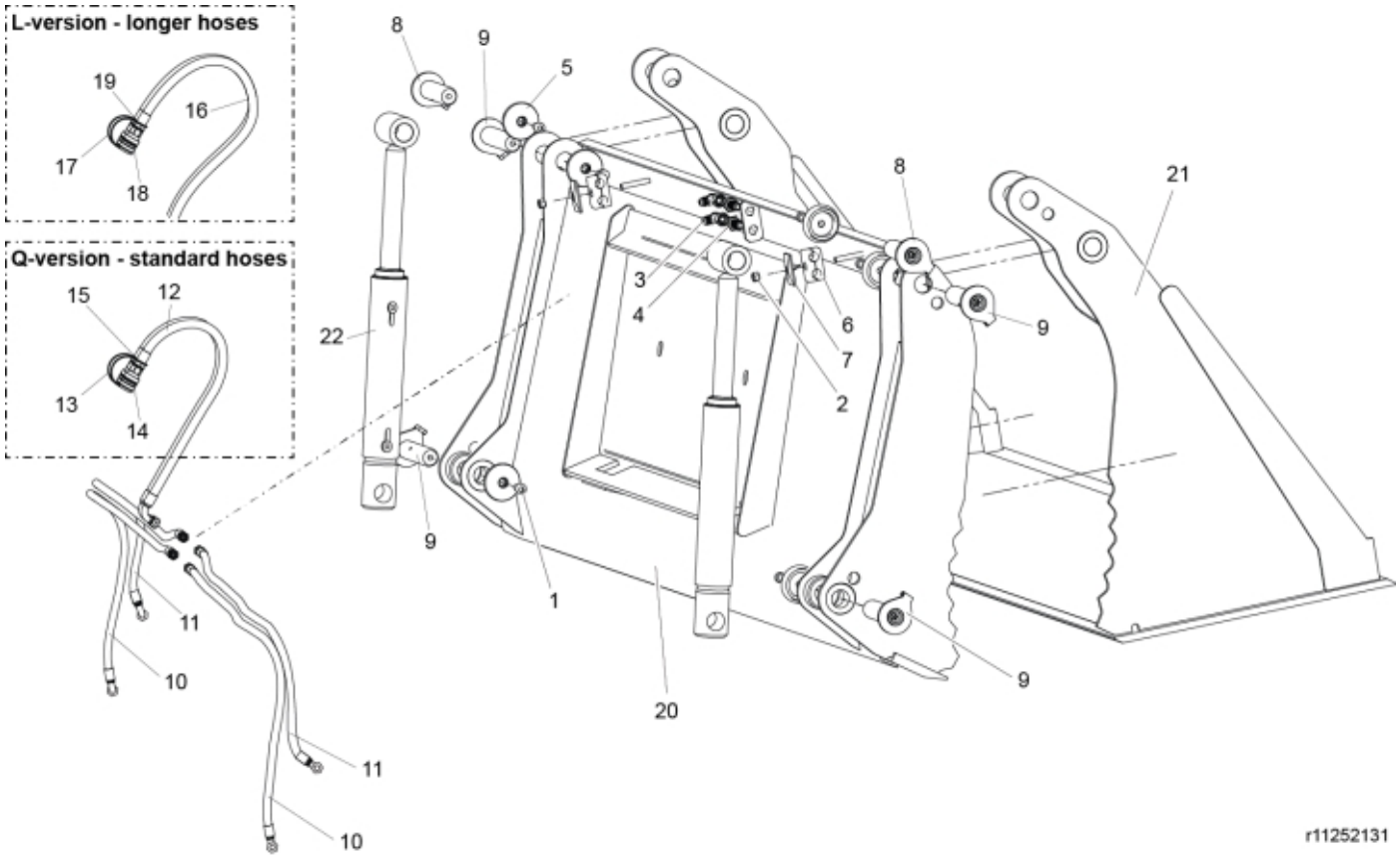
L-version - longer hoses
19
16
17
18
Q-version - standard hoses
15
12
13
14
8
9
5
22
3
4
6
7
2
8
21
3
9
9
1
20
9
11
10
11
10
r11252131


© 2025 Jost

| | |
|---|---|
| **Part assemblies** | Multipurpose 210MPU Skid Steer |
| **Specification** | Year From: 6/1/2013 12:00:00 AM |
| | Year To: 12/31/2018 12:00:00 AM |

| PartNo | Pos | Qty | Name | Specifications |
|---|---|---|---|---|
| 5004917 | 1 | 6 | Screw | |
| 5011553 | 2 | 2 | Nut | M6M M8 Loc-king |
| 5028163 | 3 | 2 PCS | Adaptor | |
| 5028211 | 4 | 2 PCS | Adaptor | |
| 5215131 | 5 | 6 | Locking cover | |
| 5221576 | 6 | 2 PCS | Hose clamp | |
| 5221582 | 7 | 2 PCS | Washer | |
| 9020105 | 8 | 2 | Pivot Pin | D=30, L=113mm |
| 9020117 | 9 | 4 | Pin | D=30mm |
| 9032283 | | 1 PCS | Hose kit | |
| 9032287 | 10 | 2 PCS | • Hose | 3/8" L=1260mm |
| 9032285 | 11 | 2 PCS | • Hose | 3/8" L=1070mm |
| 9032177 | Q | 2 PCS | Hose cpl. | 12/1/2013 12:00:00 AM |
| 9032178 | 12 | 1 PCS | • Hose | 3/8" L=600mm, Part is included in kit 9032177 Hose cpl. |
| 5044130 | 13 | 1 | • Dust Cover | Part is included in kit 60007907 Hose cpl., 9032177 Hose cpl., Part is included in kit 60007907 Hose cpl., 9032177 Hose cpl. |
| 5044127 | 14 | 1 | • Quick Coupling | 1/2", Part is included in kit 60007907 Hose cpl., 9032177 Hose cpl., Part is included in kit 60007907 Hose cpl., 9032177 Hose cpl. |
| 5013853 | 15 | 1 | • Dowty washer | Tredo 1/2", Part is included in kit 60007907 Hose cpl., 9032177 Hose cpl., Part is included in kit 60007907 Hose cpl., 9032177 Hose cpl. |
| 60007907 | L | 2 PCS | Hose cpl. | 12/1/2013 12:00:00 AM |
| 60007906 | 16 | 1 PCS | • Hose | 3/8" L=1200, Part is included in kit 60007907 Hose cpl. |
| 5044130 | 17 | 1 | • Dust Cover | Part is included in kit 60007907 Hose cpl., 9032177 Hose cpl., Part is included in kit 60007907 Hose cpl., 9032177 Hose cpl. |
| 5044127 | 18 | 1 | • Quick Coupling | 1/2", Part is included in kit 60007907 Hose cpl., 9032177 Hose cpl., Part is included in kit 60007907 Hose cpl., 9032177 Hose cpl. |
| 5013853 | 19 | 1 | • Dowty washer | Tredo 1/2", Part is included in kit 60007907 Hose cpl., 9032177 Hose cpl., Part is included in kit 60007907 Hose cpl., 9032177 Hose cpl. |
| 11262525 | 20 | 1 PCS | Frame | With attachment |
| 5022119 | | 2 | • Plug | |
| 11262490 | 21 | 1 PCS | Grab head | |
| 12724710-1 | 22 | 2 PCS | Cylinder | |


© 2025 Jost