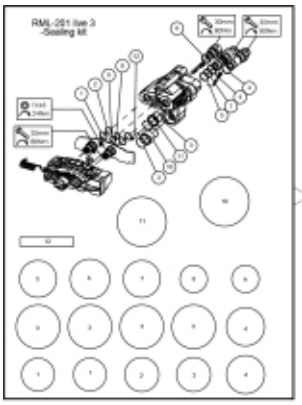

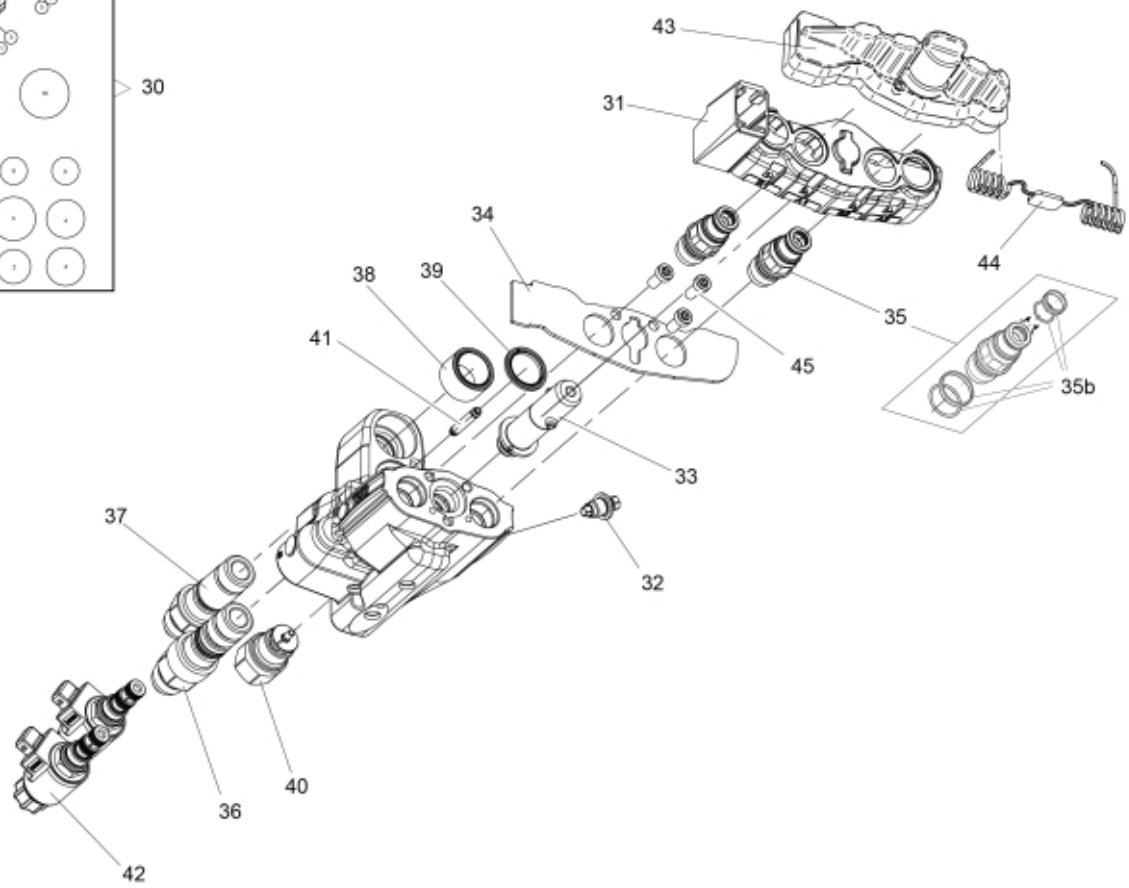

r10570171

© 2025 Jost

Part assemblies Valve Live3 M. P. R LS/OC

PartNo	Pos	Qty	Name	Specifications
10570171		1 PCS	Valve Live3 M. P. R LS/OC	
5040064	30	1	Seal kit	
10570096	31	1	Cap w. marking	Part is included in kit 10570154 Valve STM Professional Live3 OC
10570070	32	1 PCS	Check valve cpl.	
10570078	33	1	Adapter Multi coupling	
10570090	34	1 PCS	Cover plate Single 2	
4500294	35	2	Coupling (M)	Replaces 5044956/60017561
4501264	35b	1	• Seal kit	1 seal kit/coupling required
5028090	36	1 PCS	Adapter with sealing	
5028089	37	1 PCS	Adapter with sealing	
5040066	38	1 PCS	Sealing sleeve cpl.	
5040065	39	1 PCS	Sealing sleeve cpl.	
10570074	40	1 PCS	Spool control unit cpl.	
10570075	41	1 PCS	Connecting pipe cpl.	
10570093	42	2	Solenoid	
5034232	43	1	Cover	Replaces 5033905
10570094	44	1	• Cable tie	
5006019	45	3	Screw	8x16 fzb

© 2025 Jost