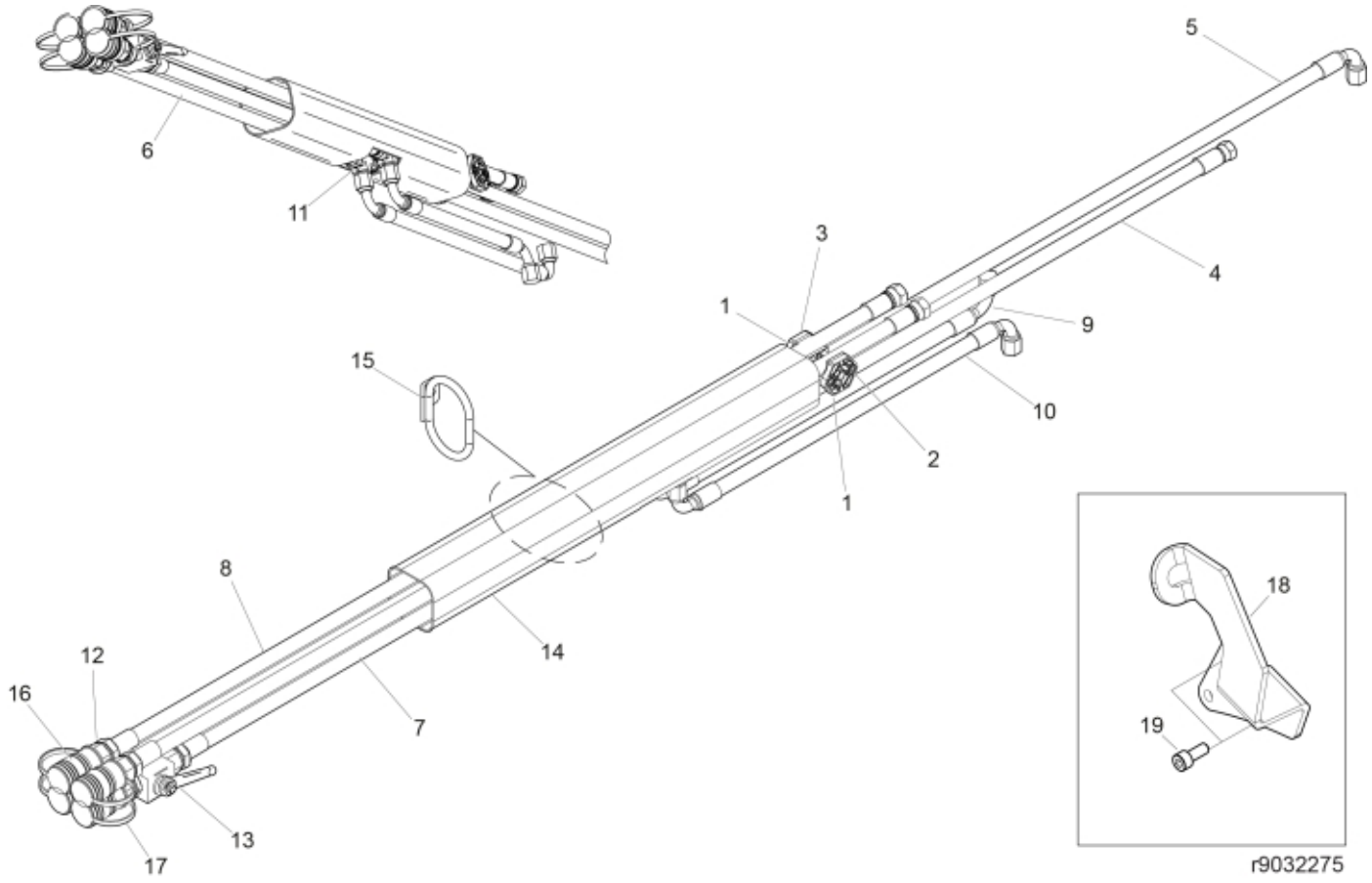

© 2025 Jost

Description	no harness
Part assemblies	Main hose kit

PartNo	Pos	Qty	Name	Specifications
5221880	1	2	Hose clamp	
5004030	2	2	Screw	MC6S M6 x 45
20708137	3	2	Nut	M6 FZB, 708137
9031712	4	1	Hose	3/8" L=3860mm
9031716	5	1	Hose	3/8" L=4280mm
9032331	6	1	Hose	3/8" L=850mm
9032332	7	1	Hose	3/8" L=775mm
9032333	8	2	Hose	3/8" L=3040mm
9031710	9	1	Hose	3/8" L=520mm
9031939	10	1	Hose	3/8" L=520mm
5028142	11	2	Adaptor	JIC 2x9/16 1x3/4
5013853	12	5	Dowty washer	Tredo 1/2", Part is included in kit 60007907 Hose cpl., 9032177 Hose cpl.
5033898	13	1	Shut-off valve	1/2"
5051949	14	1	Hose cover	L=850
5221966	15	1	Hose guide	
5045010	16	4	Quick Coupling	ISO-A 3/8" F - G1/2
5034111	17	4	Dust Cover	ISO 3/8"
60049421	18	1	Holder kit	
5004061	19	2	• Screw	MC6S M8x20

© 2025 Jost