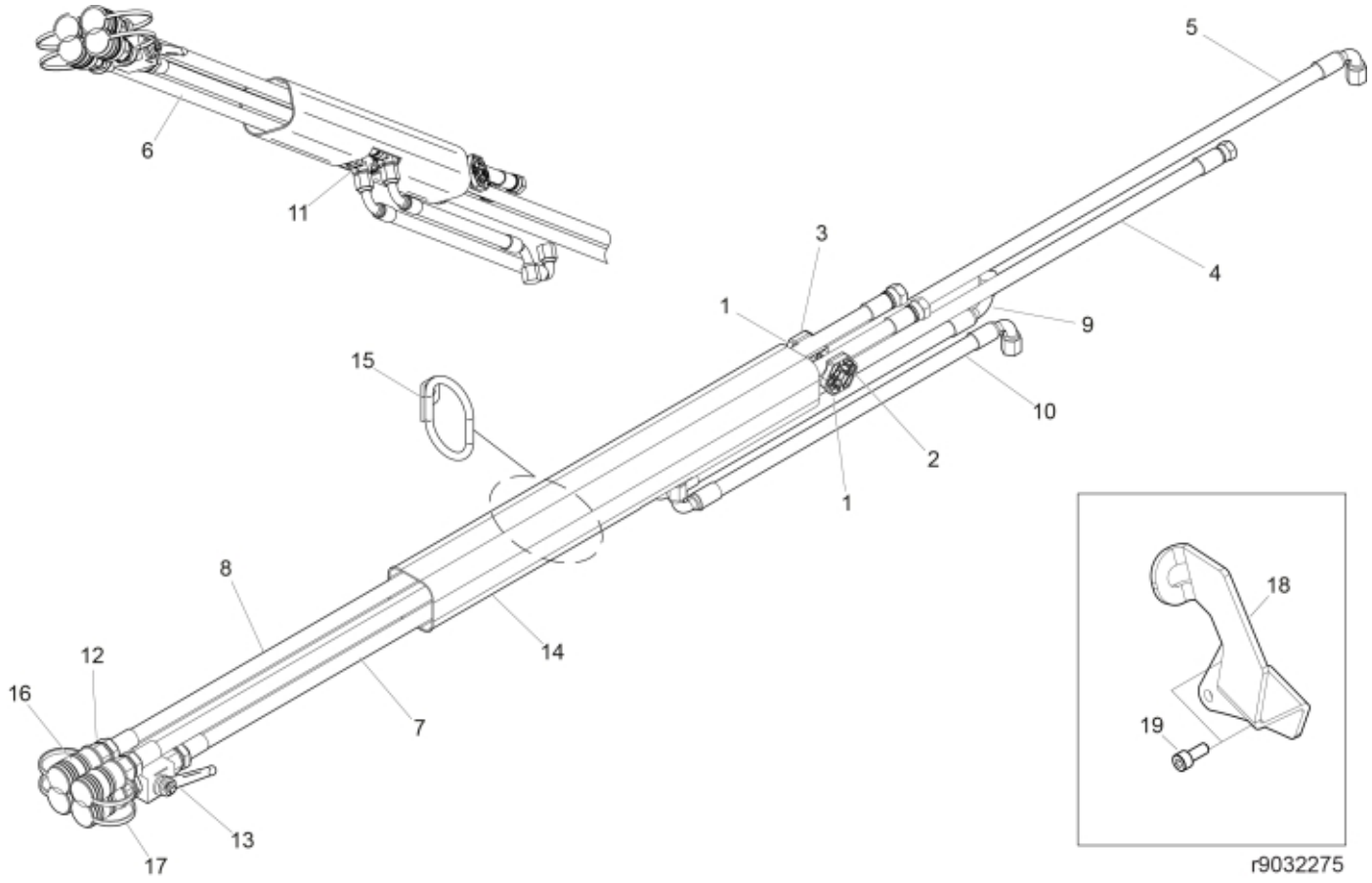



© 2025 Jost

| | |
|---|---|
| **Description** | no harness |
| **Part assemblies** | Main hose kit |

| PartNo | Pos | Qty | Name | Specifications |
|---|---|---|---|---|
| 5221880 | 1 | 2 | Hose clamp | |
| 5004030 | 2 | 2 | Screw | MC6S M6 x 45 |
| 20708137 | 3 | 2 | Nut | M6 FZB, 708137 |
| 9031712 | 4 | 1 | Hose | 3/8" L=3860mm |
| 9031716 | 5 | 1 | Hose | 3/8" L=4280mm |
| 9032331 | 6 | 1 | Hose | 3/8" L=850mm |
| 9032332 | 7 | 1 | Hose | 3/8" L=775mm |
| 9032333 | 8 | 2 | Hose | 3/8" L=3040mm |
| 9031710 | 9 | 1 | Hose | 3/8" L=520mm |
| 9031939 | 10 | 1 | Hose | 3/8" L=520mm |
| 5028142 | 11 | 2 | Adaptor | JIC 2x9/16 1x3/4 |
| 5013853 | 12 | 5 | Dowty washer | Tredo 1/2", Part is included in kit 60007907 Hose cpl., 9032177 Hose cpl. |
| 5033898 | 13 | 1 | Shut-off valve | 1/2" |
| 5051949 | 14 | 1 | Hose cover | L=850 |
| 5221966 | 15 | 1 | Hose guide | |
| 5044127 | 16 | 4 | Quick Coupling | 1/2", Part is included in kit 60007907 Hose cpl., 9032177 Hose cpl. |
| 5044130 | 17 | 4 | Dust Cover | Part is included in kit 60007907 Hose cpl., 9032177 Hose cpl. |
| 60049421 | 18 | 1 | Holder kit | |
| 5004061 | 19 | 2 | • Screw | MC6S M8x20 |


© 2025 Jost