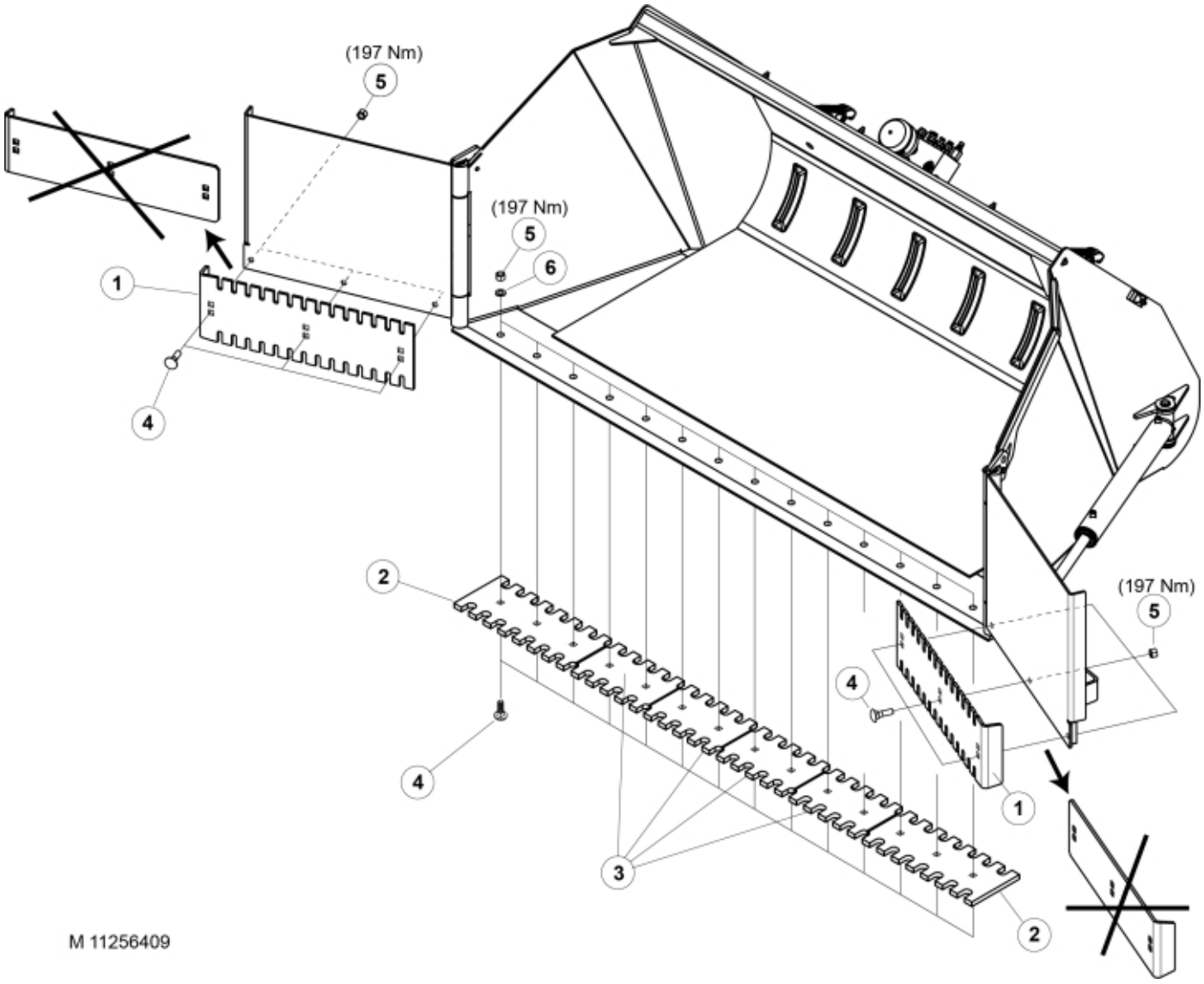

© 2025 Jost

Description	230
Part assemblies	Bolt on Serrated Cutting Edge kit

PartNo	Pos	Qty	Name	Specifications
60022189-22	1	2 PCS	Cutting edge	Replaces 11262588
60022191-22	2	2 PCS	Cutting edge	Replaces 11262589
60022193-22	3	4 PCS	Cutting edge	Replaces 11262590
5006035	4	20 PCS	Screw	MVBF M16x50
5011557	5	20	Nut	Loc-King M16
5013105	6	14	Washer	BRB 17 x 30 x 3 300HV

© 2025 Jost