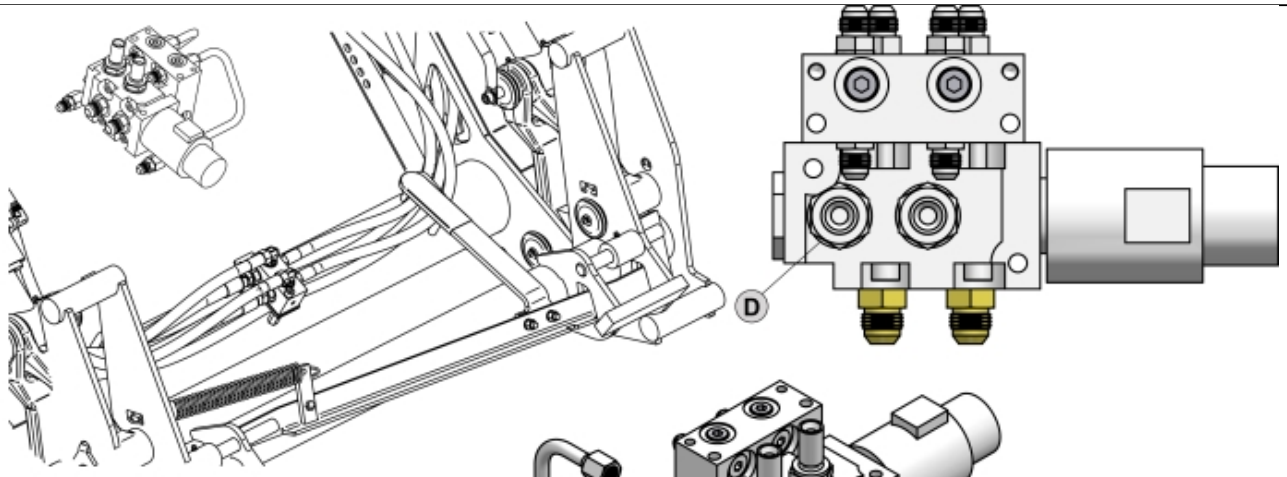

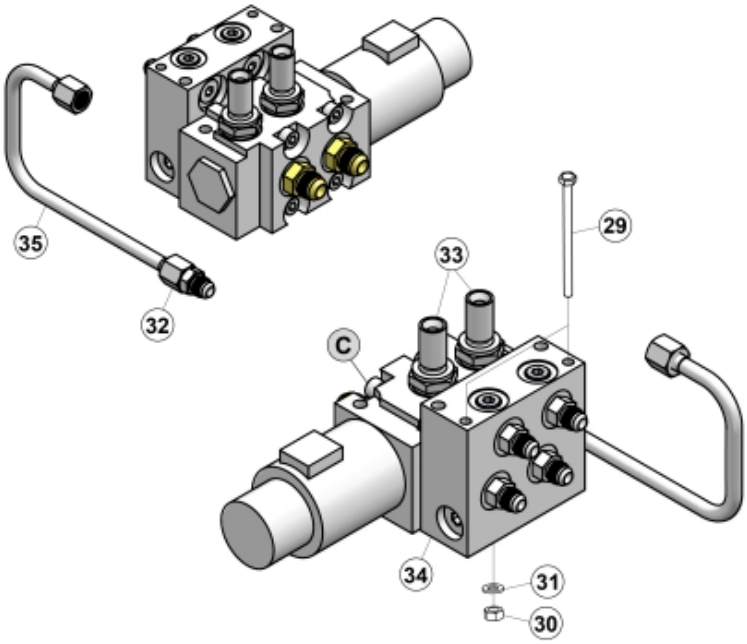

M10550476_477_480-1

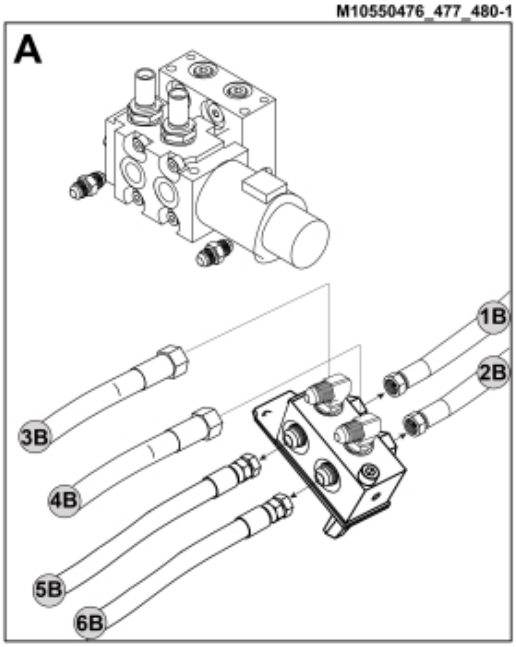

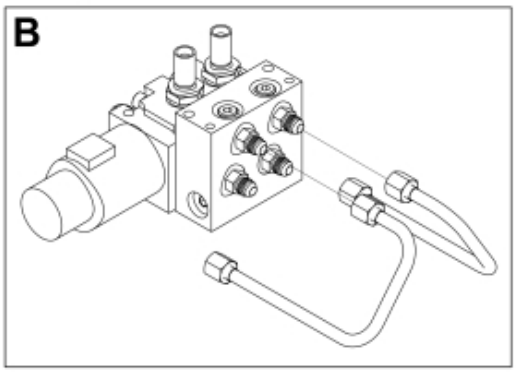

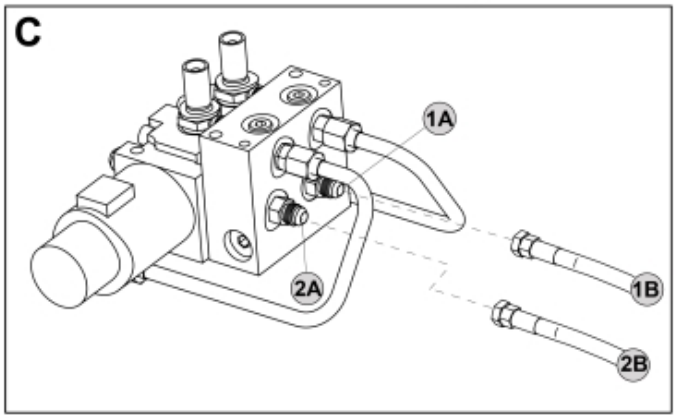

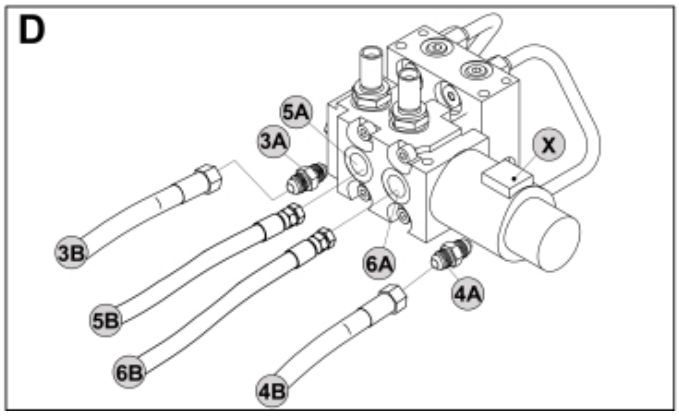

© 2025 Jost

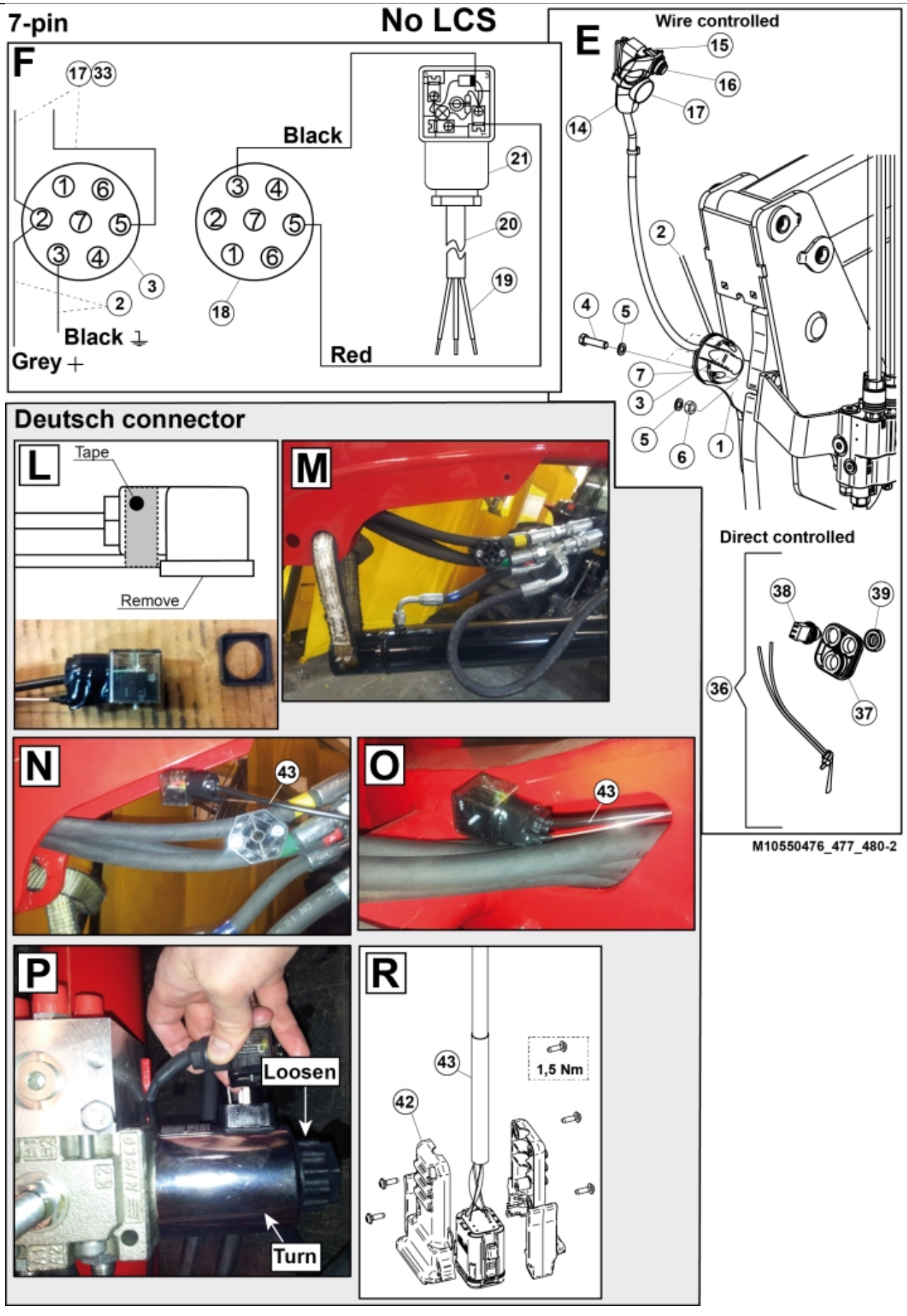
7-pin
No LCS
F
17
33
Black
21
20
19
18
Red
Black
Grey
E
Wire controlled
15
16
17
14
2
4
5
7
3
5
6
1
Deutsch connector
L
Tape
Remove
M
Direct controlled
38
39
36
37
N
43
O
43
P
Loosen
Turn
R
43
1,5 Nm
42
M10550476_477_480-2

© 2025 Jost

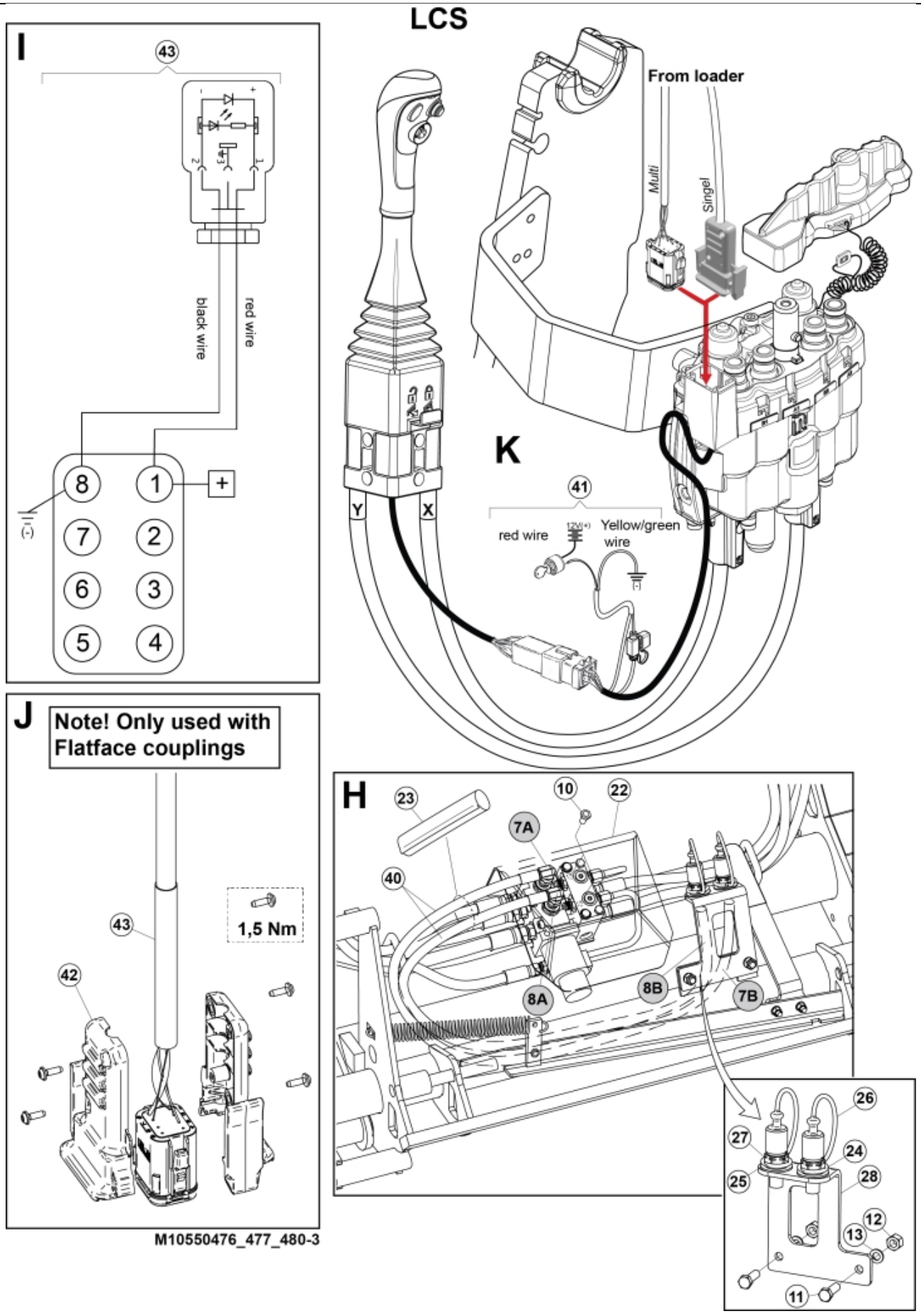

M10550476_477_480-3

© 2025 Jost

Part assemblies		3rd service		
Specification		Year To: 1/31/2016 12:00:00 AM		
PartNo	**Pos**	**Qty**	**Name**	**Specifications**
10550480		1	3rd service	1/31/2016 12:00:00 AM
5002060	10	2	Screw	M6S M8x12 (8,8)
5002077	11	2	Screw	M6S 10x30
5011554	12	2	Nut	Loc-King M10
5013102	13	4	Washer	BRB 10 x 18 x 2
60009571	22	1	Protection plate	Replaces 5221270
5221975	23	1	Hose cover	
5222579		1	• Bracket kit	
5022157	24	1	• Washer, red	
5022159	25	1	• Washer, blue	
5044129	26	2	• Dust Cover	1/2" Male
5044940	27	2	• Coupling	ISO-A 1/2" Male - G3/8
5222580	28	1	• Bracket	
10550445		1 PCS	Control valve	
5002978	29	2	• Screw	M6S 8x129
5011553	30	1	• Nut	M6M M8 Loc-king
5013101	31	1	• Washer	BRB 8,4 x 16
5028109	32	2	• Adaptor	JIC 9/16"
5028262	33	2	• Adaptor	
4500757	34	1 PCS	• Control valve	Replaces 5221389
5222581	35	2	• Oil pipe	
5102207	38	1 PCS	Harness	
1103117	40	2	Hose	3/8"
5102110	41	1	Harness	
5103054	42	1	Connector handle	

© 2025 Jost