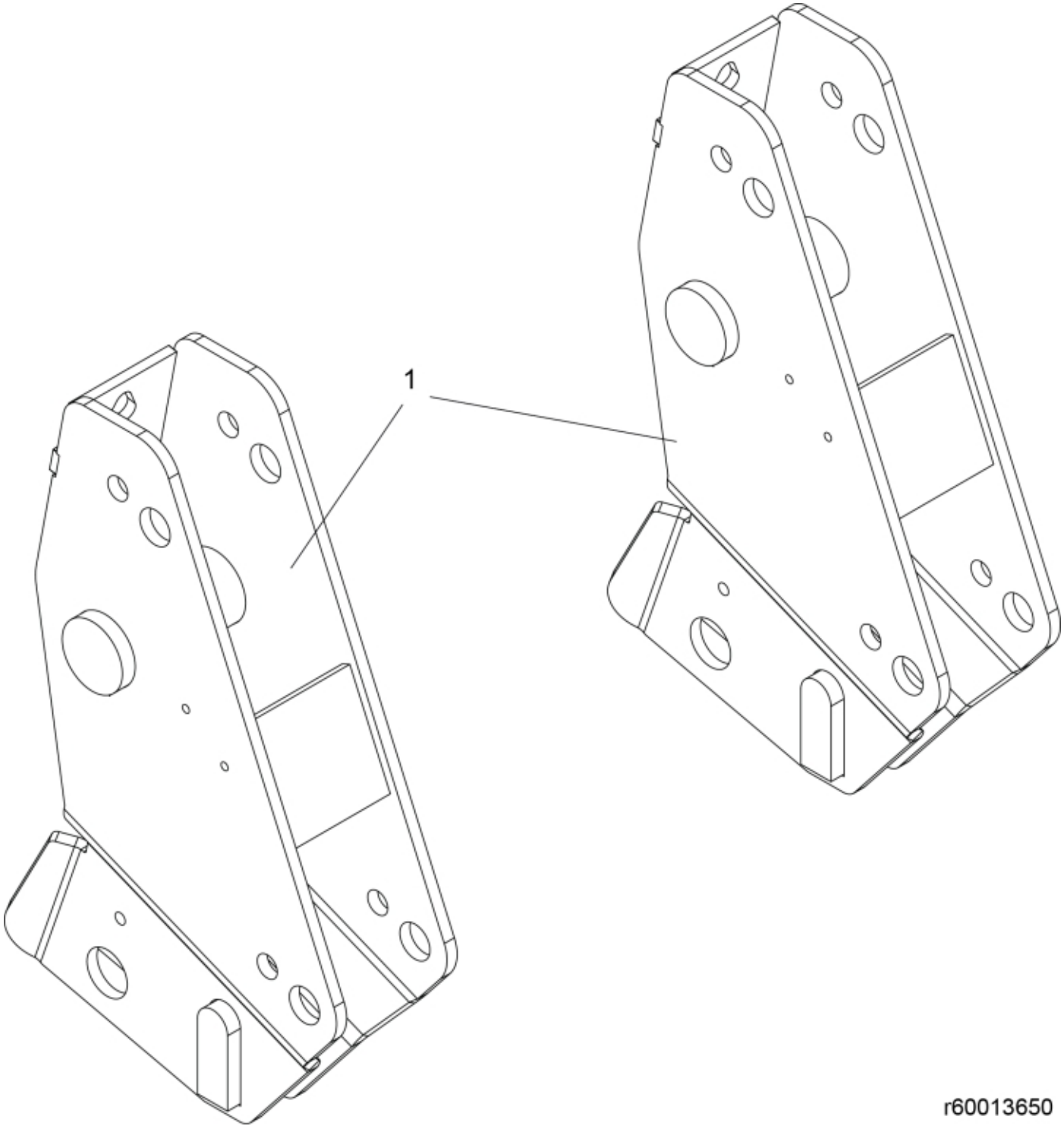

© 2025 Jost

Description	Versa-X NSL
Part assemblies	Bearing box DM

PartNo	Pos	Qty	Name	Specifications
60013632-7	1	2	Bearing box	Grey

© 2025 Jost