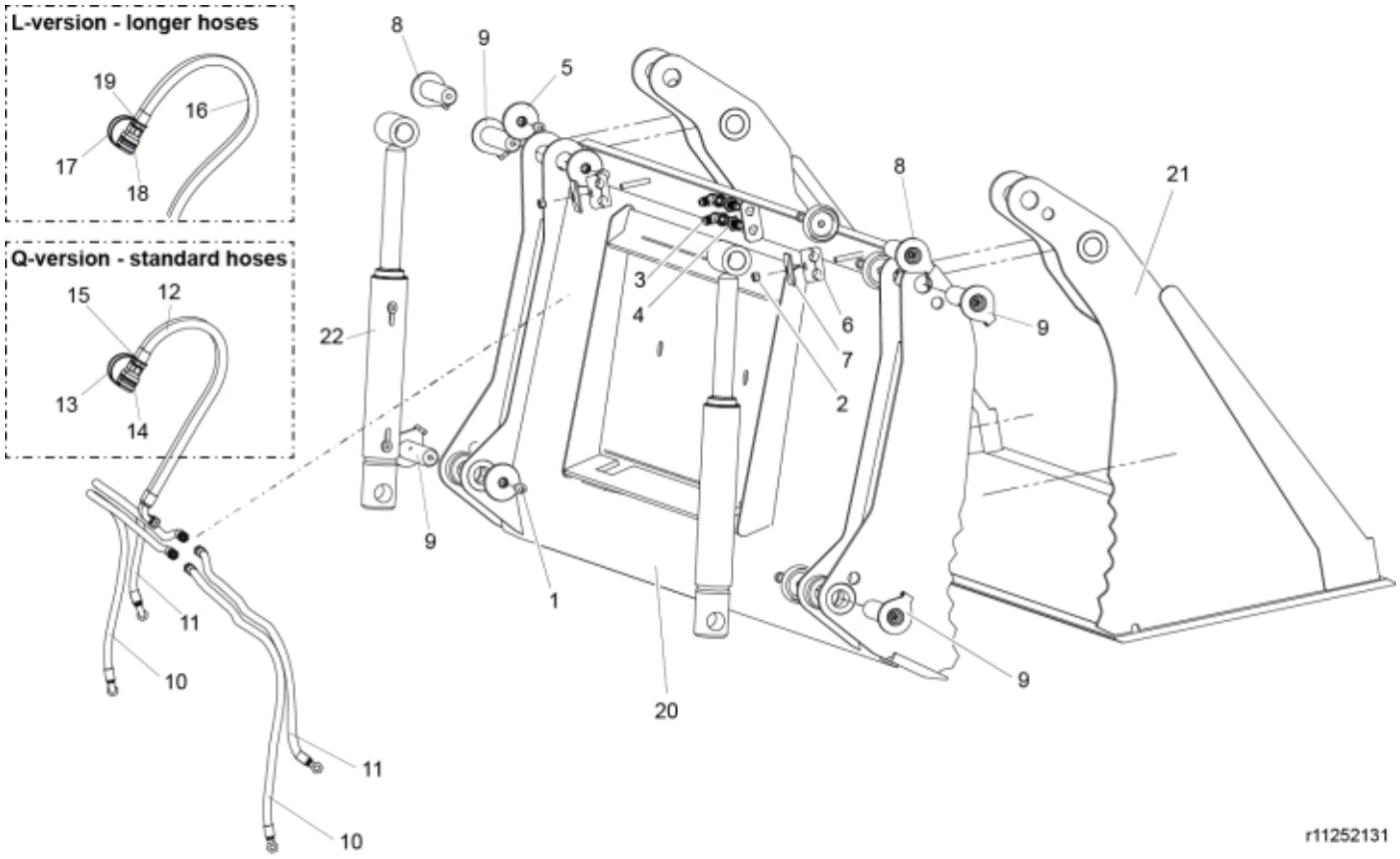
L-version - longer hoses
19
16
17
18
Q-version - standard hoses
15
12
13
14
8
9
5
22
3
4
6
7
2
8
21
3
9
9
1
20
9
11
10
11
10
r11252131

© 2025 Jost

Part assemblies	Multipurpose 185MPU Skid Steer
Specification	Year From: 6/1/2013 12:00:00 AM
	Year To: 12/31/2018 12:00:00 AM

PartNo	Pos	Qty	Name	Specifications
5004917	1	6	Screw	
5011553	2	2	Nut	M6M M8 Loc-king
5028163	3	2 PCS	Adaptor	
5028211	4	2 PCS	Adaptor	
5215131	5	6	Locking cover	
5221576	6	2 PCS	Hose clamp	
5221582	7	2 PCS	Washer	
9020105	8	2	Pivot Pin	D=30, L=113mm
9020117	9	4	Pin	D=30mm
9032170		1 PCS	Hose kit	
9032182	10	2 PCS	• Hose	3/8" L=1150mm
9032181	11	2 PCS	• Hose	3/8" L=960mm
9032177	Q	2 PCS	Hose cpl.	12/1/2013 12:00:00 AM
9032178	12	1 PCS	• Hose	3/8" L=600mm, Part is included in kit 9032177 Hose cpl.
5044130	13	1	• Dust Cover	Part is included in kit 60007907 Hose cpl., 9032177 Hose cpl., Part is included in kit 60007907 Hose cpl., 9032177 Hose cpl.
5044127	14	1	• Quick Coupling	1/2", Part is included in kit 60007907 Hose cpl., 9032177 Hose cpl., Part is included in kit 60007907 Hose cpl., 9032177 Hose cpl.
5013853	15	1	• Dowty washer	Tredo 1/2", Part is included in kit 60007907 Hose cpl., 9032177 Hose cpl., Part is included in kit 60007907 Hose cpl., 9032177 Hose cpl.
60007907	L	2 PCS	Hose cpl.	12/1/2013 12:00:00 AM
60007906	16	1 PCS	• Hose	3/8" L=1200, Part is included in kit 60007907 Hose cpl.
5044130	17	1	• Dust Cover	Part is included in kit 60007907 Hose cpl., 9032177 Hose cpl., Part is included in kit 60007907 Hose cpl., 9032177 Hose cpl.
5044127	18	1	• Quick Coupling	1/2", Part is included in kit 60007907 Hose cpl., 9032177 Hose cpl., Part is included in kit 60007907 Hose cpl., 9032177 Hose cpl.
5013853	19	1	• Dowty washer	Tredo 1/2", Part is included in kit 60007907 Hose cpl., 9032177 Hose cpl., Part is included in kit 60007907 Hose cpl., 9032177 Hose cpl.
11262298	20	1 PCS	Frame	With attachment
5022119		2	• Plug	
11262256	21	1	Grab head	
12724710-1	22	2 PCS	Cylinder	

© 2025 Jost