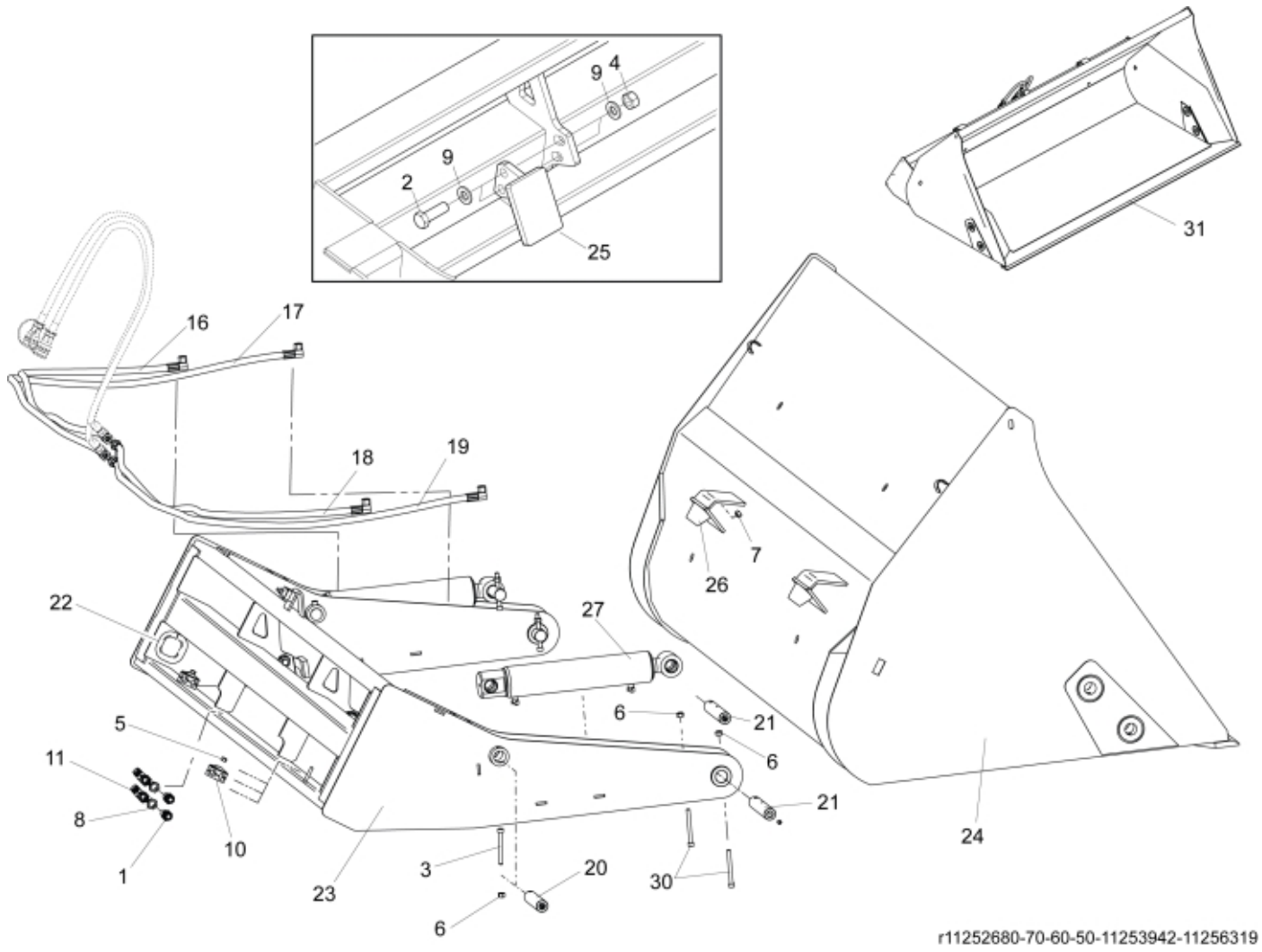

r11252680-70-60-50-11253942-11256319

© 2025 Jost

Part assemblies	High Tip Bucket XH M+ 200
Specification	Year From: 1/1/2014 12:00:00 AM

PartNo	Pos	Qty	Name	Specifications
1120159	1	2	Adaptor	
5002154	2	4	Screw	M6S 16 x 50 (8.8)
5004956	3	4	Screw	MC6S M10 x 90
5011057	4	4 PCS	Nut	M6M M16
5011553	5	3	Nut	M6M M8 Loc-king
5011554	6	6	Nut	Loc-King M10
5011555	7	2	Nut	M12 Loc
5011757	8	2	Nut	
5013105	9	8	Washer	BRB 17 x 30 x 3 300HV
5016968	10	3	Hose clamp	
5028031	11	2	T-Adapter	
60013236		1	Hose kit	
9032404	16	1 PCS	• Hose	3/8" L=1300mm
9032405	17	1 PCS	• Hose	3/8" L=1650mm
9032402	18	1 PCS	• Hose	3/8" L=1100mm
9032403	19	1 PCS	• Hose	3/8" L=1450mm
11251926	20	2 PCS	Pin	L=159mm
11251929	21	4 PCS	Pin	L=200mm
60010422	22	2 PCS	Cover	
11252198-17	23	1 PCS	Frame	
60044944-17	24	1	Bucket	
5022119		2	• Plug	
11262592-22	25	2 PCS	Support	
11262597	26	2 PCS	Rubber pad	
60126216-1	27	2	Cylinder	4/8/2026 12:00:00 AM
5004957	30	2 PCS	Screw	MC6S M10x70
11252164	31	1	Cutting edge	
11137170		1 PCS	Decal	200 XH
1123673		1	Warning decal	
1123674		1	Warning decal	"Read manual"
11136459		1	Warning decal	Only for North Am. Warning triangle
11136447		1	Warning decal	Only for North Am. DANGER

© 2025 Jost