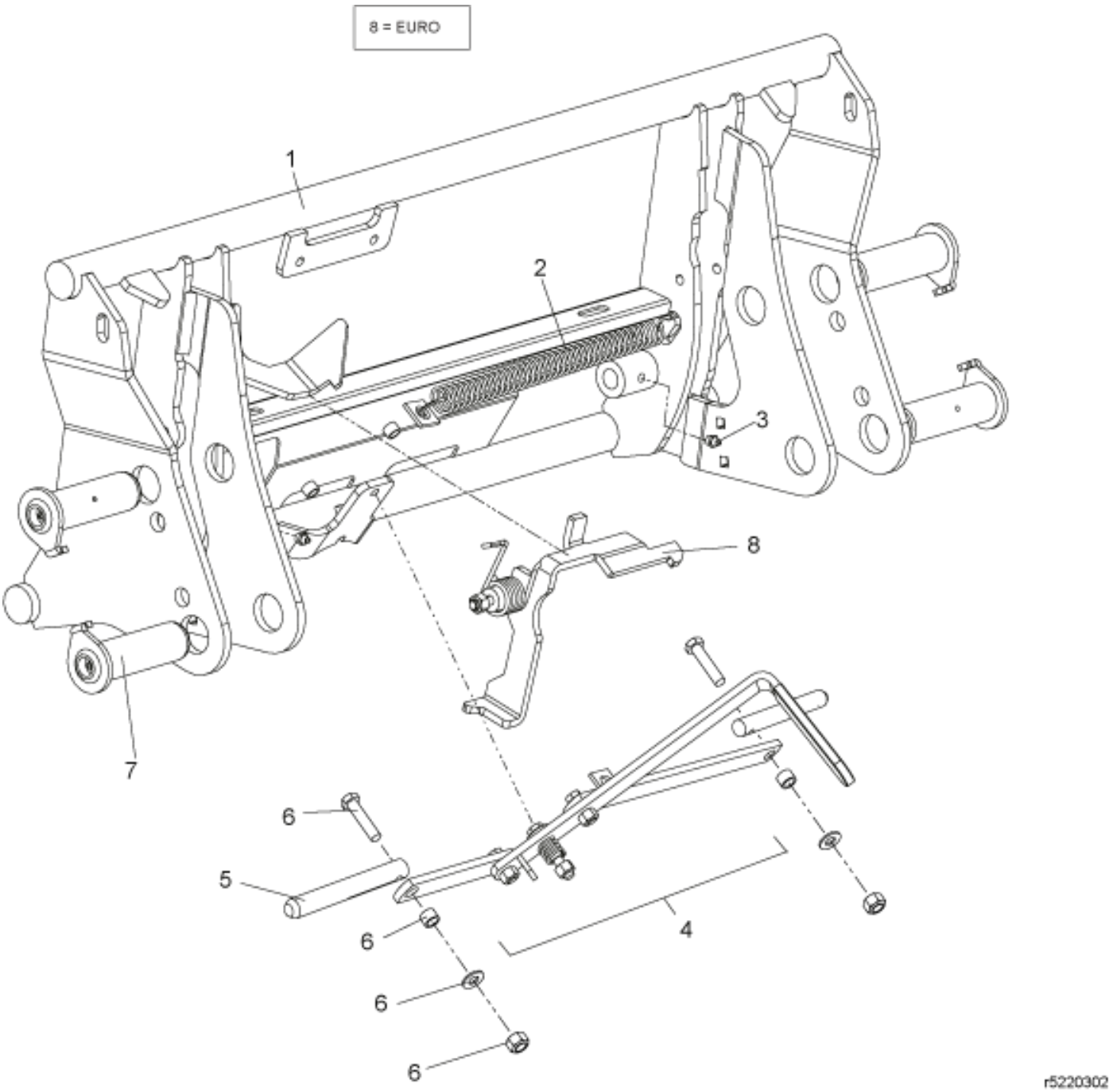



© 2025 Jost

| | |
|---|---|
| **Description** | Tool carrier |
| **Part assemblies** | Euro |
| **Specification** | Specification: Zetor Red |

| PartNo | Pos | Qty | Name | Specifications |
|---|---|---|---|---|
| 5220302-25 | | 1 PCS | Euro | Zetor Red |
| 5220286-25 | 1 | 1 PCS | Tool carrier | Zetor Red |
| 1101035 | 2 | 1 | Spring | |
| 5023005 | 3 | 2 | Greaser | M 10 x 1 |
| 5220265 | 4 | 1 | Lever kit | |
| 4500859 | 5 | 2 | Pin kit | Kit includes 1x Pin and 1x Screw kit |
| 4500867 | 6 | 2 | • Screw kit | Included in Pin kit |
| 60021067 | 7 | 1 | Pin kit | Replaces 9020071 |
| 4500321 | 8 | 1 | Click-on | |


© 2025 Jost