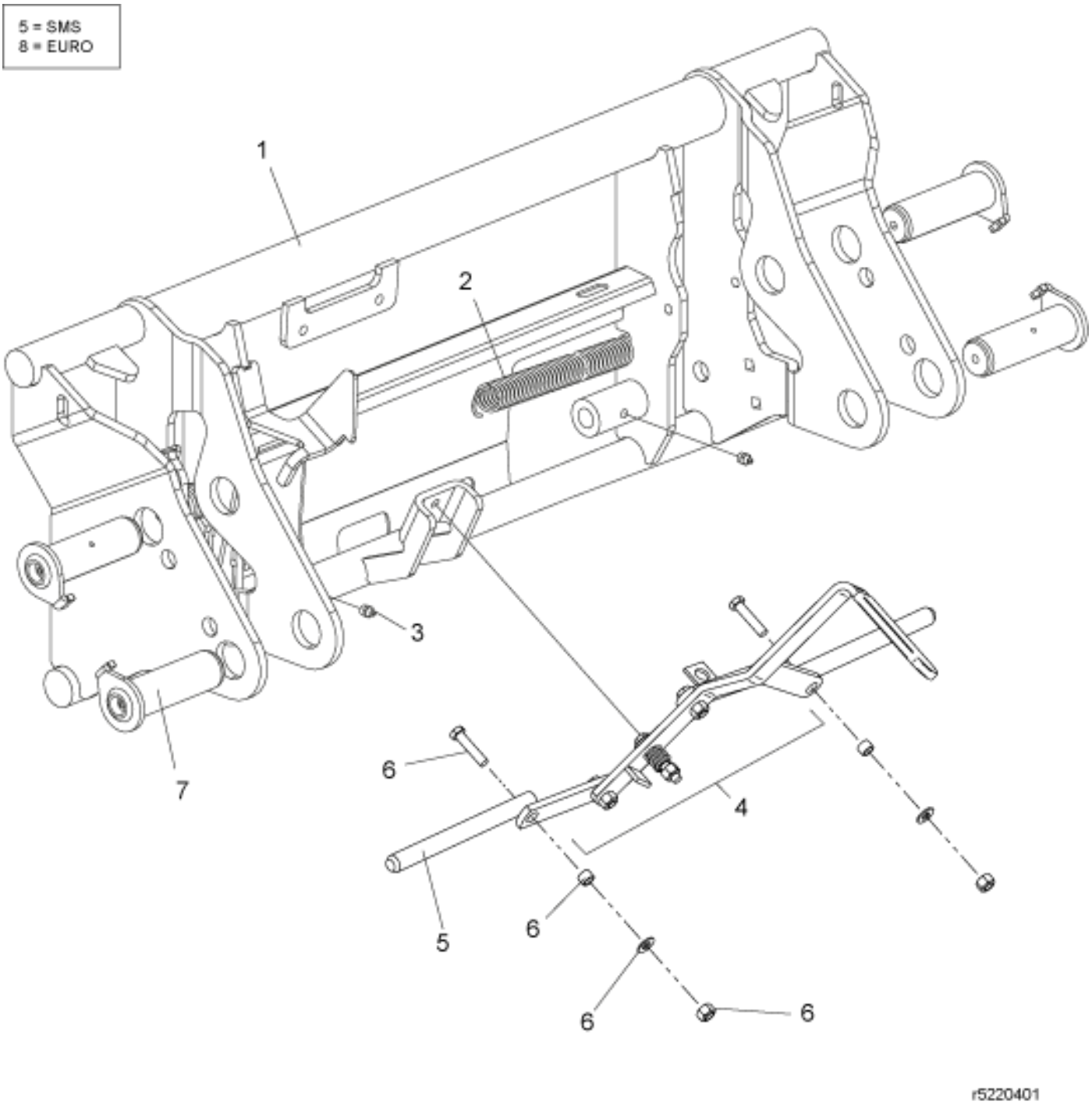

© 2025 Jost

Description	Tool carrier
Part assemblies	Euro/SMS
Specification	Specification: Zetor Red

PartNo	Pos	Qty	Name	Specifications
5220401-25		1 PCS	Euro/SMS	Zetor Red
5220182-25	1	1 PCS	Tool carrier	Zetor Red
1101035	2	1	Spring	
5023005	3	2	Greaser	M 10 x 1
5220394	4	1 PCS	Lever kit	
4500861	5	2 PCS	Pin kit	Includes 4500867
4500867	6	2	• Screw kit	Included in Pin kit
60021067	7	1	Pin kit	Replaces 9020071

© 2025 Jost