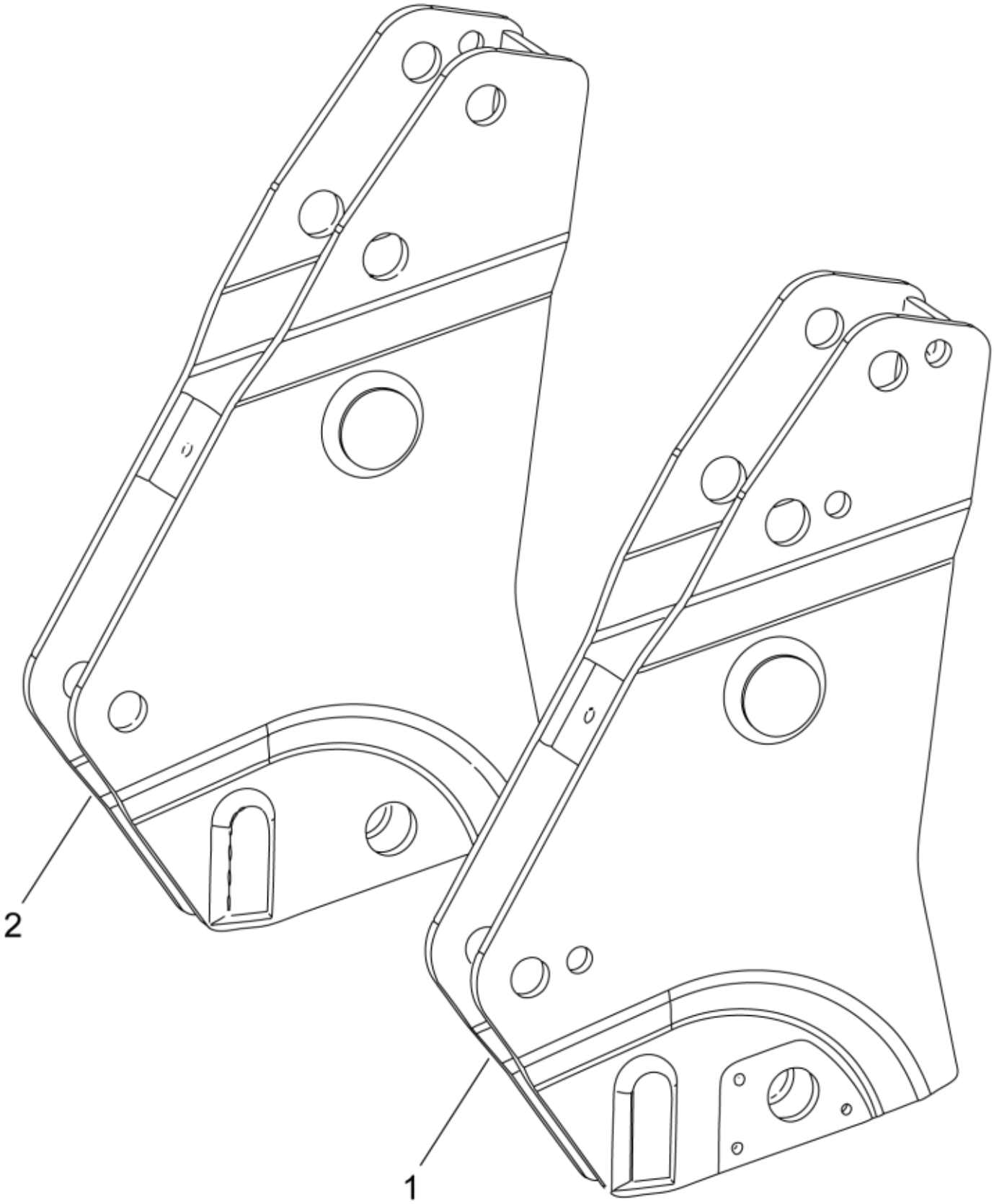

r5212513_5212523

© 2025 Jost

Part assemblies	Bearing boxes	
Specification	Specification: Zetor Red	

PartNo	Pos	Qty	Name	Specifications
5220193-25		1	Bearing boxes	Zetor Red
5212511-25	1	1	• Bearing box LH	Zetor Red
5212521-25	2	1	• Bearing box RH	Zetor Red

© 2025 Jost