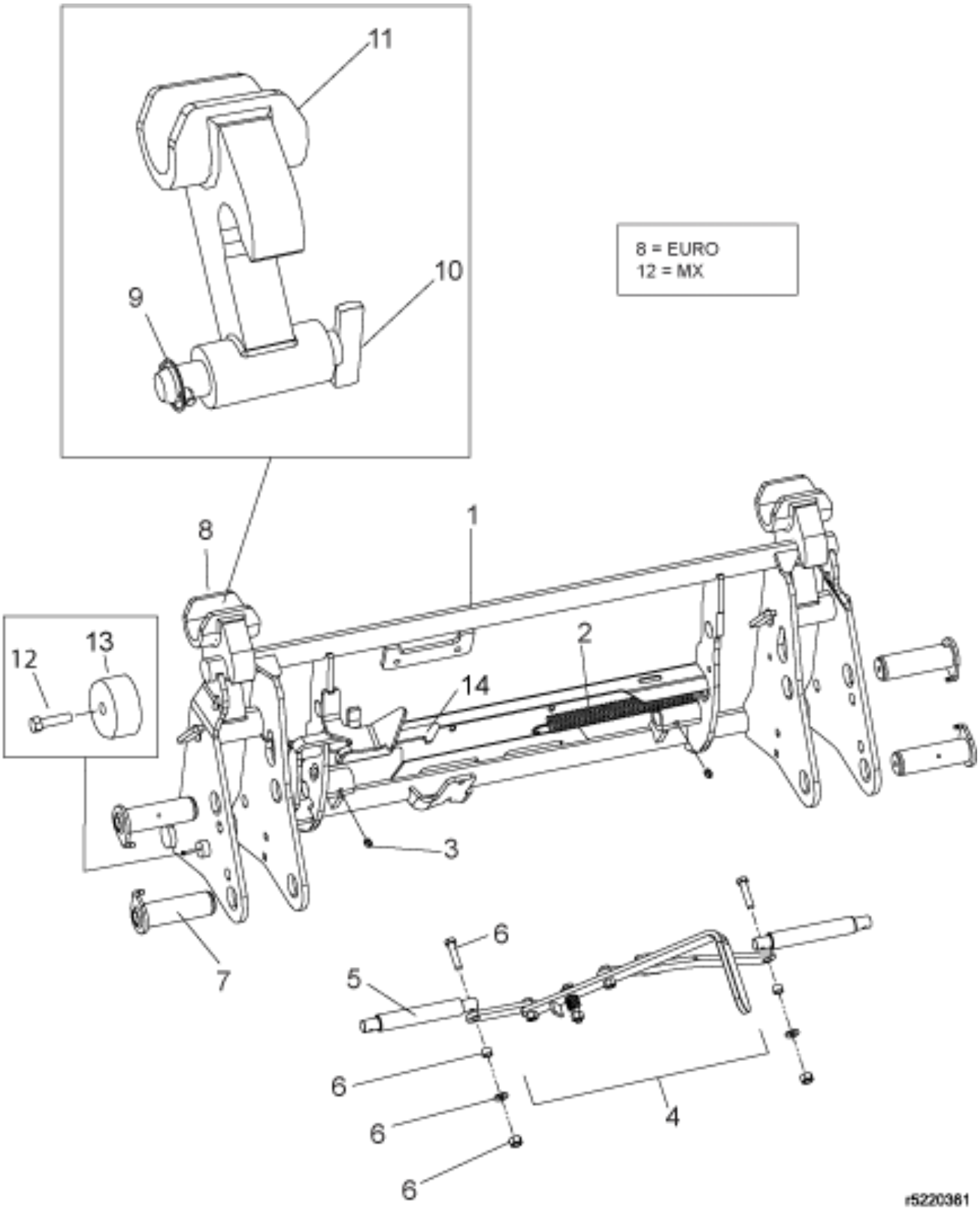

© 2025 Jost

Description	Tool carrier
Part assemblies	Euro/MX

PartNo	Pos	Qty	Name	Specifications
5220361-25		1	Euro/MX	
5220359-25	1	1	Tool carrier	Zetor Red
1101035	2	1	Spring	
5023005	3	2	Greaser	M 10 x 1
5220385	4	1	Lever kit	
4500860	5	2	Pin kit	Includes 4500867
4500867	6	2	• Screw kit	Included in Pin kit
60021067	7	1	Pin kit	Replaces 9020071
5220383	8	2	MX Replacement hook set	For Euro/MX tool carrier only
1102001	9	1	• Linch pin	
5220395	10	1	• Pin	
5220382	11	1	• MX-adapter	
5002077	12	2	Screw	M6S 10x30
5220418	13	2	Lug	
4500527	14	1	Click-on	

© 2025 Jost