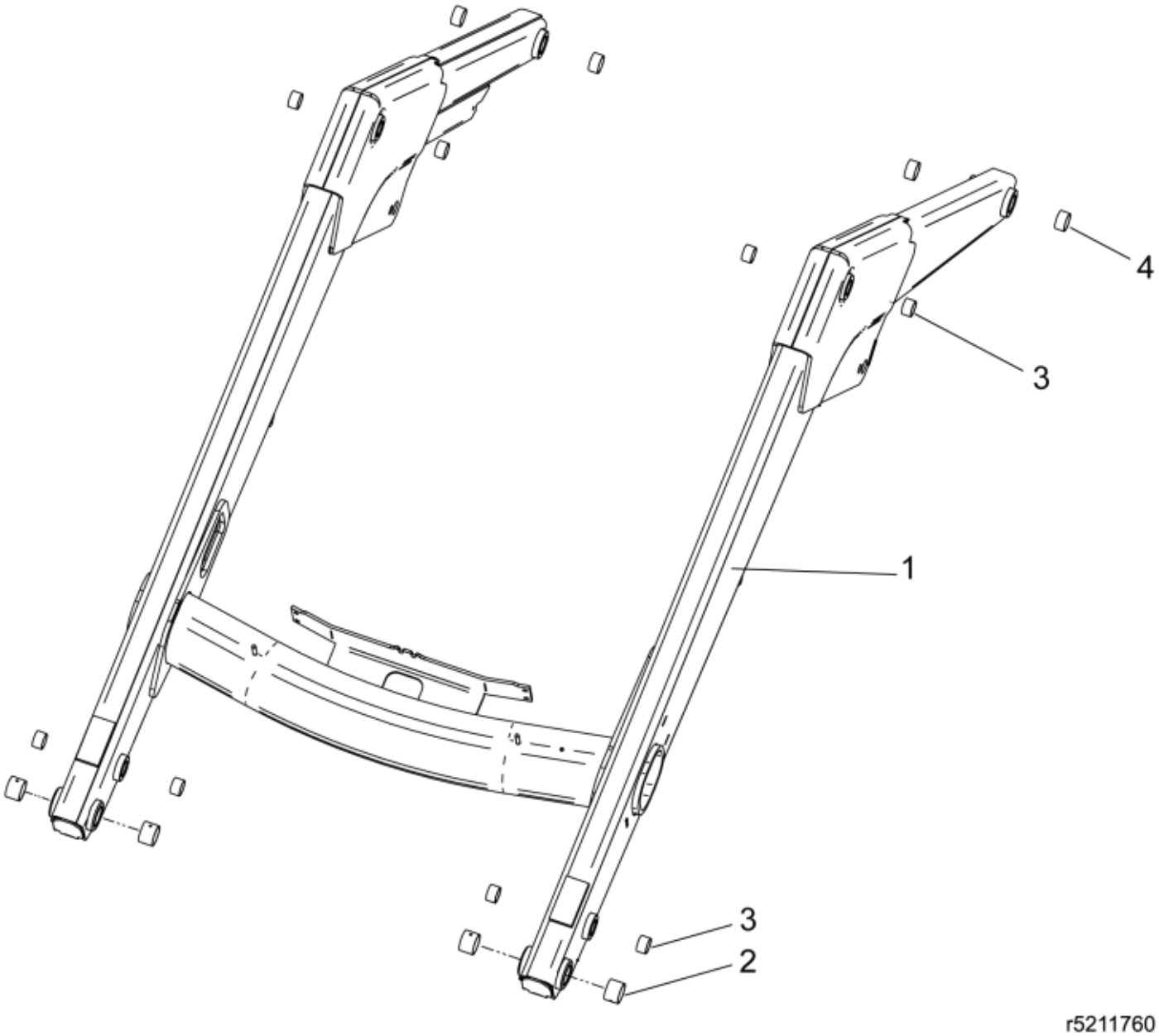

© 2025 Jost

Part assemblies	Loader beam w. bushings
Specification	Specification: Zetor Red

PartNo	Pos	Qty	Name	Specifications
5220602-25	1	1	Loader beam w. bushings	Zetor Red
5018904	2	4	• Bushing	D40 L=30
5018515	3	8	• Bushing	D30 L=20
5018514	4	4	• Bushing	D35 L=20

© 2025 Jost