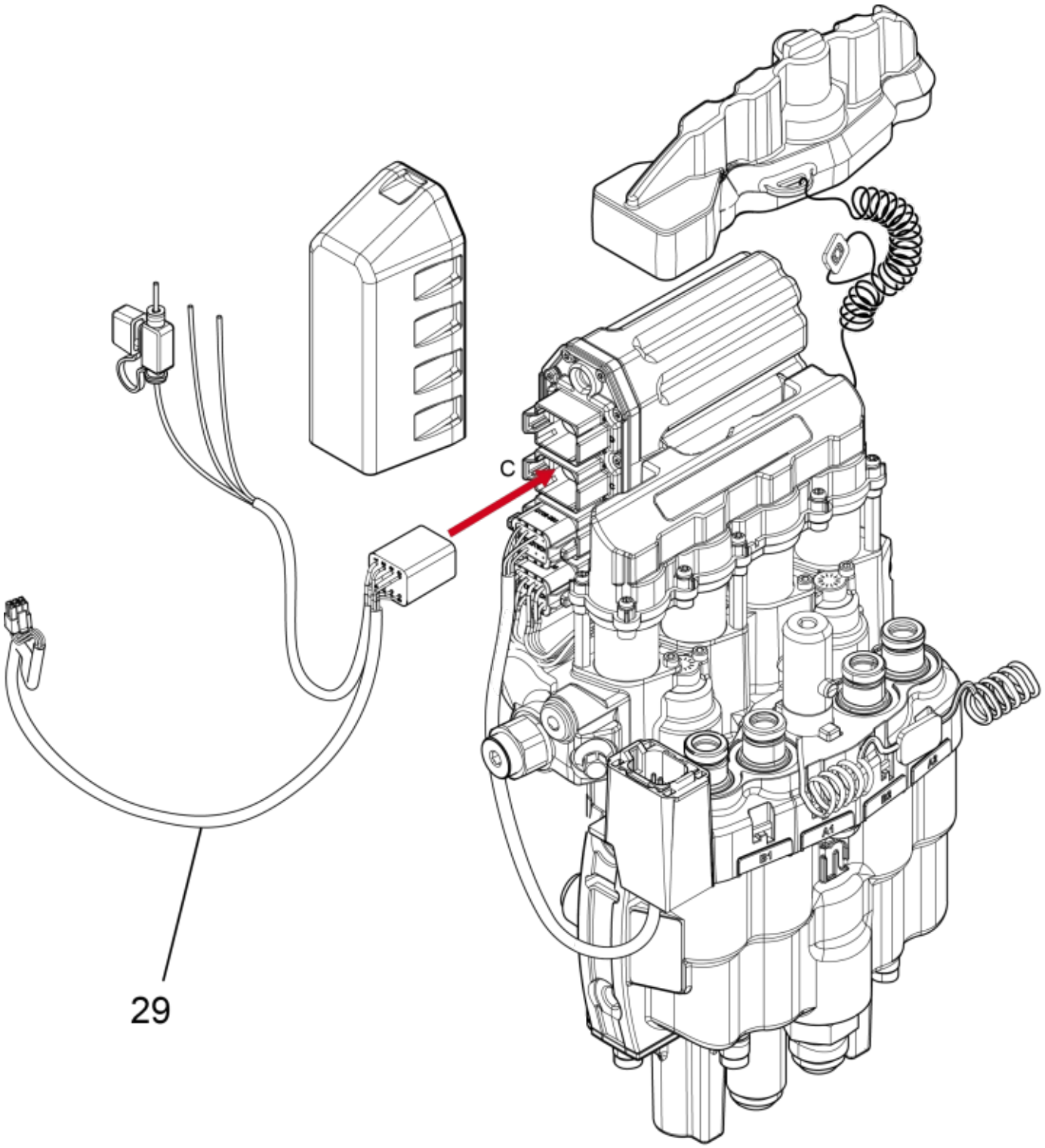

Electro

© 2025 Jost

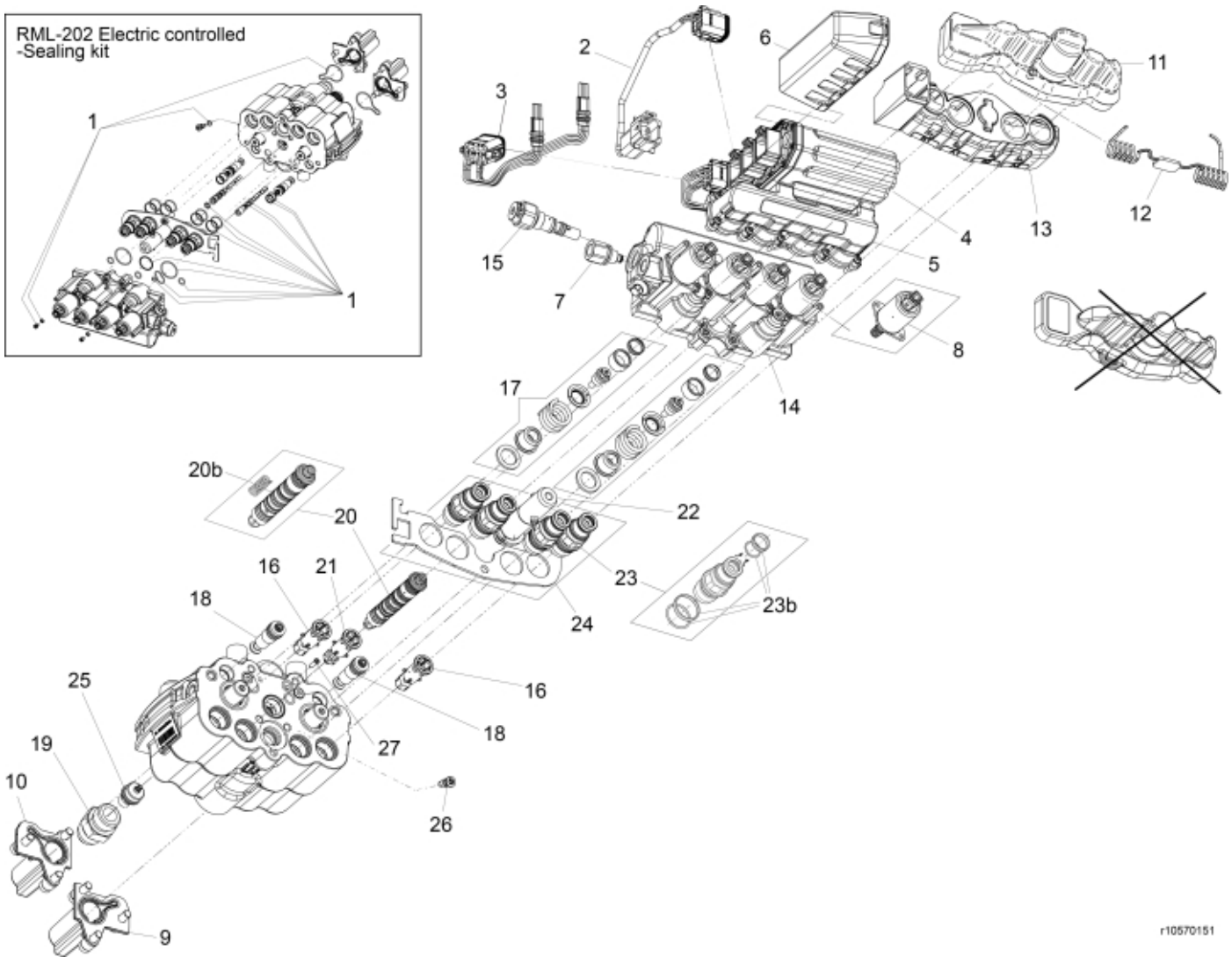
RML-202 Electric controlled
-Sealing kit
1
1
2
3
6
11
12
13
4
5
15
7
8
14
17
20b
20
22
16
21
18
23
23b
24
25
16
18
19
27
10
26
9
r10570151

© 2025 Jost

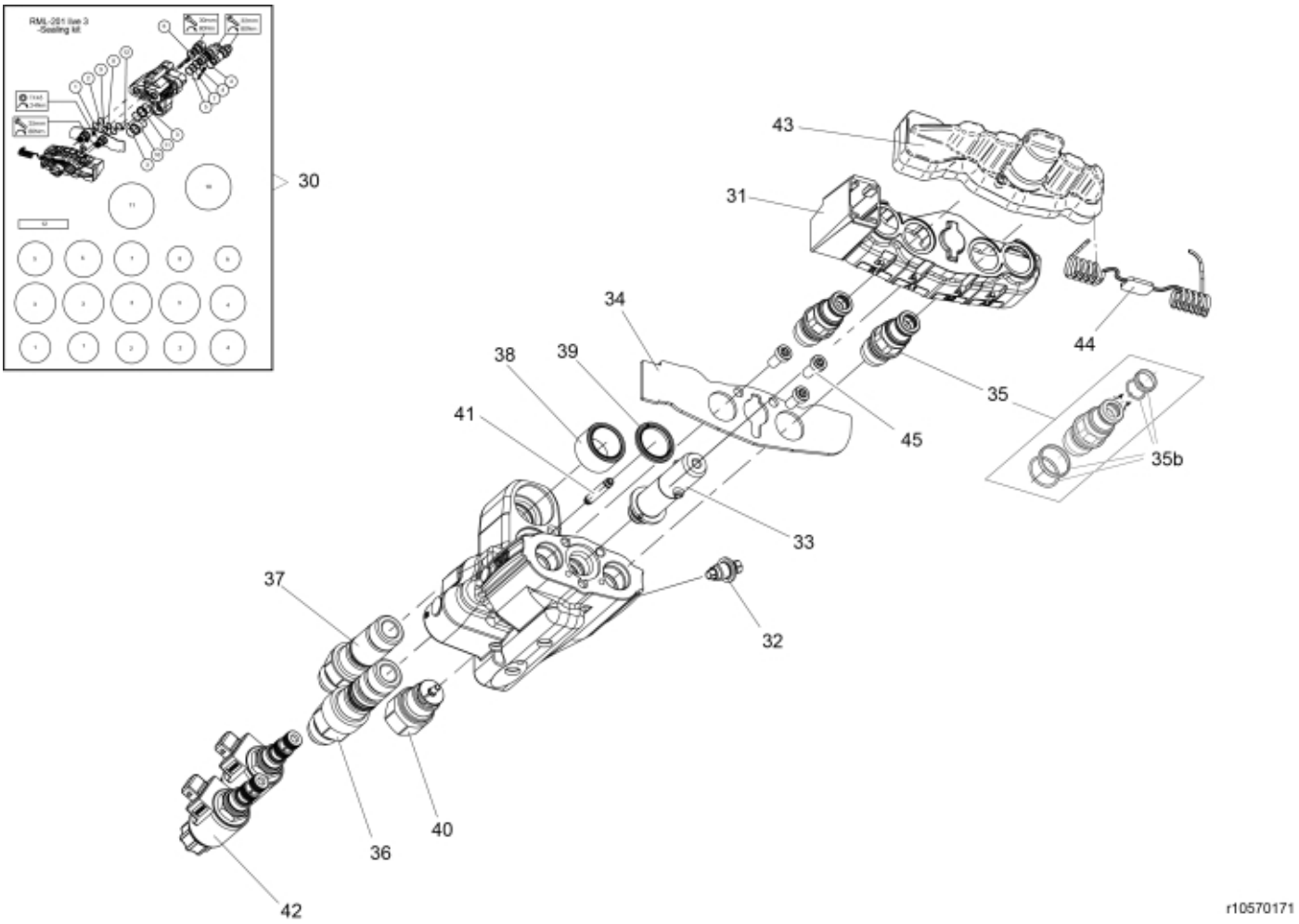

© 2025 Jost

Description	225 bar
Part assemblies	Valve STM EasyDrive Live3 OC
Specification	Specification: Replaces 10570152, 10570124, 10570017

PartNo	Pos	Qty	Name	Specifications
10570177		1 PCS	Valve STM EasyDrive Live3 OC	Replaces 10570152, 10570124, 10570017
4501260	1	1	Seal kit	LCS Electric, Part is included in kit 10570154 Valve STM Professional Live3 OC
5102119	2	1	Cable M.	
5102121	3	1	Cable DC	Part is included in kit 10570154 Valve STM Professional Live3 OC
60001960	4	1	Masterunit LCS L3	Replaces 5101068, Part is included in kit 10570154 Valve STM Professional Live3 OC
10570138	5	1	• Cover	Part is included in kit 10570154 Valve STM Professional Live3 OC
5101096	6	1	• Cap	Part is included in kit 10570154 Valve STM Professional Live3 OC
5028088	7	1	Adapter cpl.	Part is included in kit 10570154 Valve STM Professional Live3 OC
10570092	8	4	Solenoid	Part is included in kit 10570154 Valve STM Professional Live3 OC
10570187	9	1	Cap RH	(10570084), Part is included in kit 10570154 Valve STM Professional Live3 OC
10570186	10	1	Cap LH	Replaces 10570083, Part is included in kit 10570154 Valve STM Professional Live3 OC
5034232	11	1	Cover	Replaces 5033905
10570094	12	1	• Cable tie	
10570096	13	1	Cap w. marking	Part is included in kit 10570154 Valve STM Professional Live3 OC, Part is included in kit 10570154 Valve STM Professional Live3 OC
10570180	14	1	Servo top	Replaces 10570085, Part is included in kit 10570154 Valve STM Professional Live3 OC
10570068	15	1	Pressure relief valve	Part is included in kit 10570154 Valve STM Professional Live3 OC
10570071	16	2	Check valve cpl.	Part is included in kit 10570154 Valve STM Professional Live3 OC
10570086	17	2	Spool control	Part is included in kit 10570154 Valve STM Professional Live3 OC
10570069	18	2	Check valve cpl.	Part is included in kit 10570154 Valve STM Professional Live3 OC
5028086	19	1	Adapter cpl.	Part is included in kit 10570154 Valve STM Professional Live3 OC
10570097	20	1 PCS	Shunt OC cpl.	Part is included in kit 10570154 Valve STM Professional Live3 OC
4501272	20b	1	• Spring	
10570072	21	1	Pressure relief valve	Part is included in kit 10570154 Valve STM Professional Live3 OC
10570078	22	1	Adapter Multi coupling	
4500294	23	4	Coupling (M)	Replaces 5044956/60017561
4501264	23b	1	• Seal kit	1 seal kit/coupling required
10570088	24	1	Cover plate	
10570188	25	1 PCS	Cartridge	Replaces 10570102, Part is included in kit 10570154 Valve STM Professional Live3 OC
10570135	26	1 PCS	Check valve	Part is included in kit 10570154 Valve STM Professional Live3 OC
10570137	27	1 PCS	Plug	Part is included in kit 10570154 Valve STM Professional Live3 OC
5102120	29	1	Cable cpl.	
5040064	30	1	Seal kit	

© 2025 Jost

10570096	31	1	Cap w. marking	Part is included in kit 10570154 Valve STM Professional Live3 OC, Part is included in kit 10570154 Valve STM Professional Live3 OC
10570070	32	1 PCS	Check valve cpl.	
10570078	33	1	Adapter Multi coupling	
10570090	34	1 PCS	Cover plate Single 2	
4500294	35	2	Coupling (M)	Replaces 5044956/60017561
4501264	35b	1	• Seal kit	1 seal kit/coupling required
5028090	36	1 PCS	Adapter with sealing	
5028089	37	1 PCS	Adapter with sealing	
5040066	38	1 PCS	Sealing sleeve cpl.	
5040065	39	1 PCS	Sealing sleeve cpl.	
10570074	40	1 PCS	Spool control unit cpl.	
10570075	41	1 PCS	Connecting pipe cpl.	
10570093	42	2	Solenoid	
5034232	43	1	Cover	Replaces 5033905
10570094	44	1	• Cable tie	
5006019	45	3	Screw	8x16 fzb

© 2025 Jost