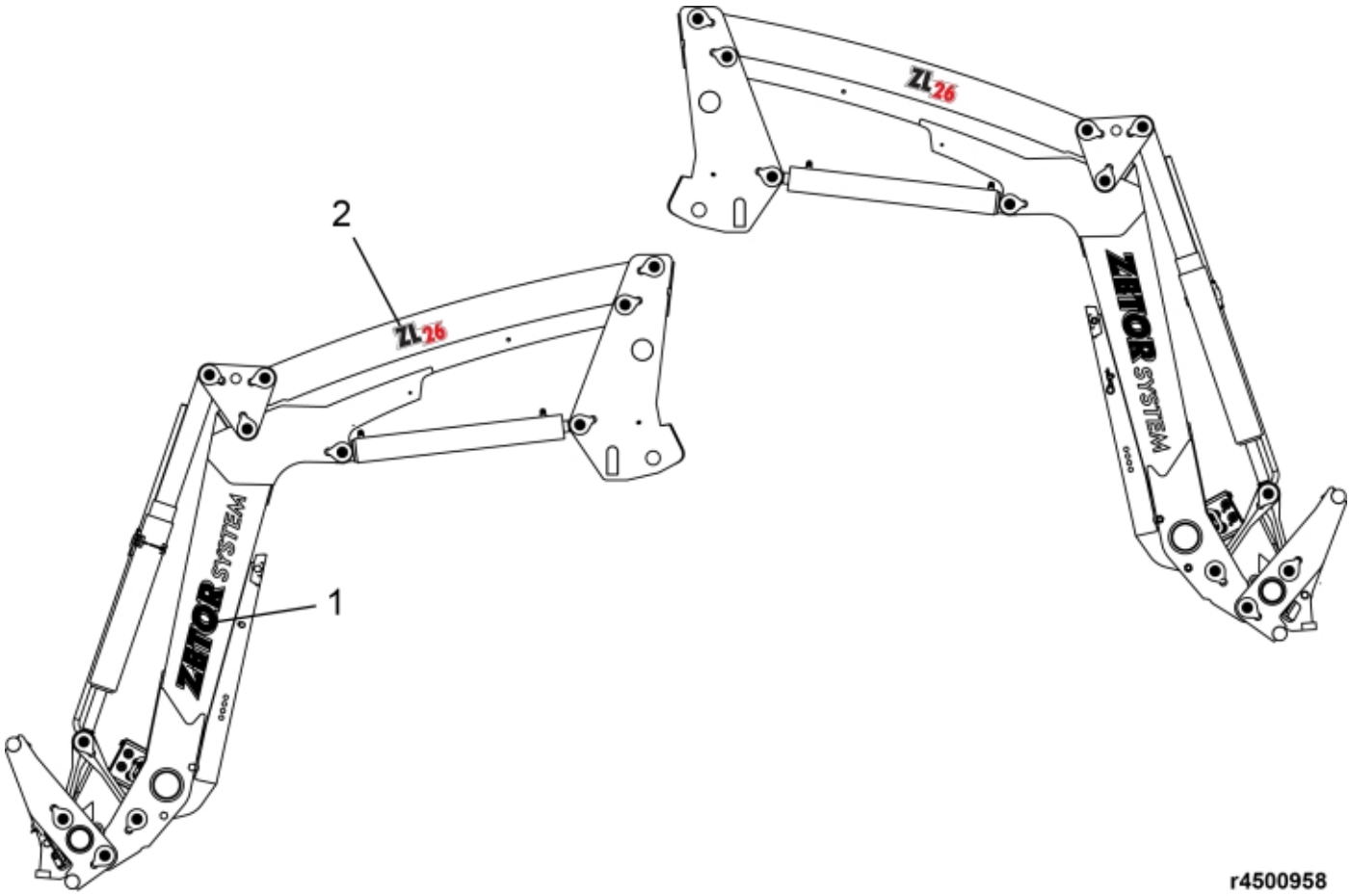

r4500958

© 2025 Jost

Description	Zetor
Part assemblies	Decal kit ZL26

PartNo	Pos	Qty	Name	Specifications
11136587	1	2 PCS	Decal, Brand	
11136936	2	2 PCS	Decal, Model	

© 2025 Jost