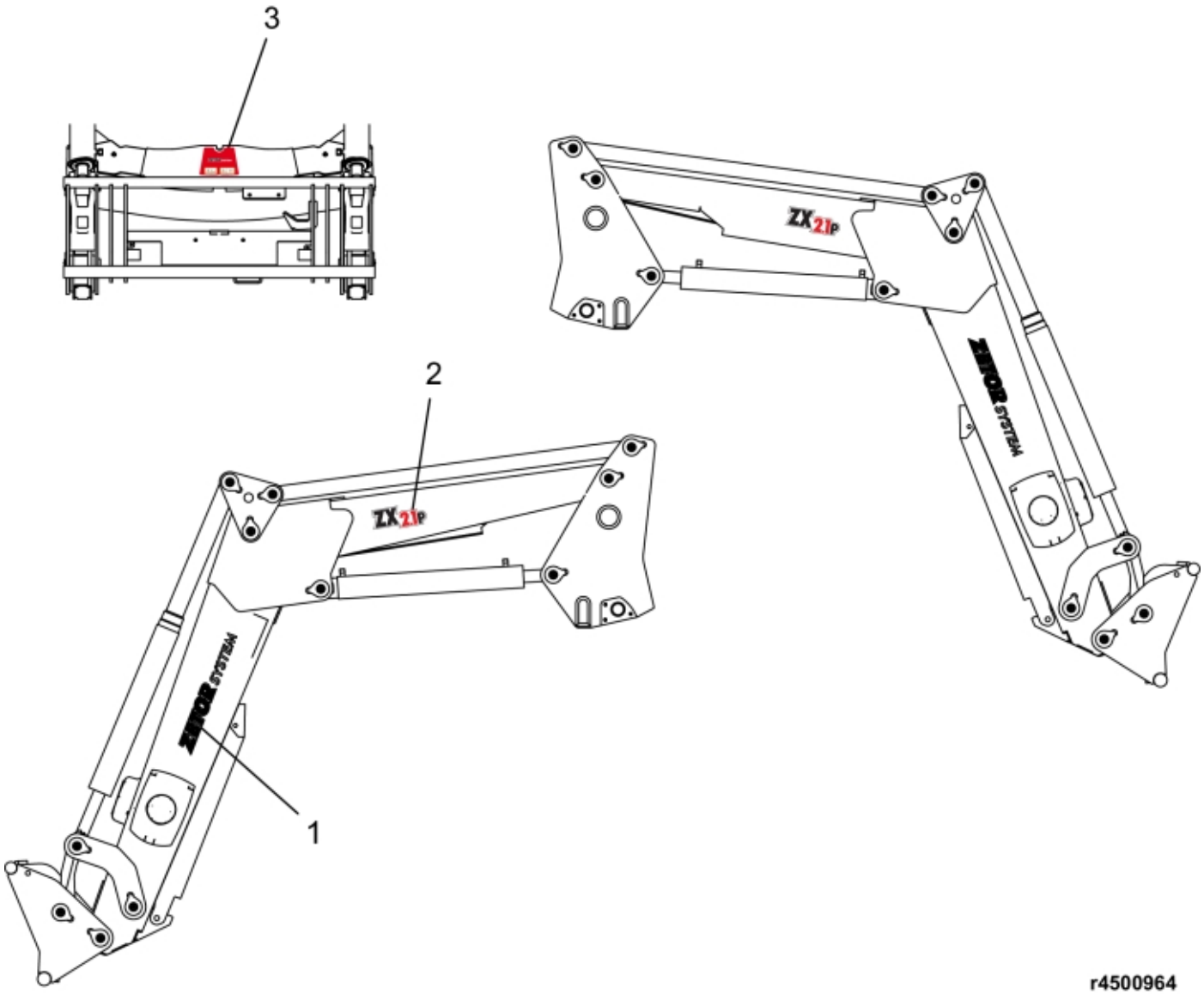

© 2025 Jost

Description	Zetor
Part assemblies	Decal kit ZX2.1P

PartNo	Pos	Qty	Name	Specifications
4500964		1 PCS	Decal kit ZX2.1P	
11136976	1	2 PCS	Decal, Brand	
11137192	2	2 PCS	Decal, Model	
11136954	3	1 PCS	Decal Zetor trapezium	

© 2025 Jost