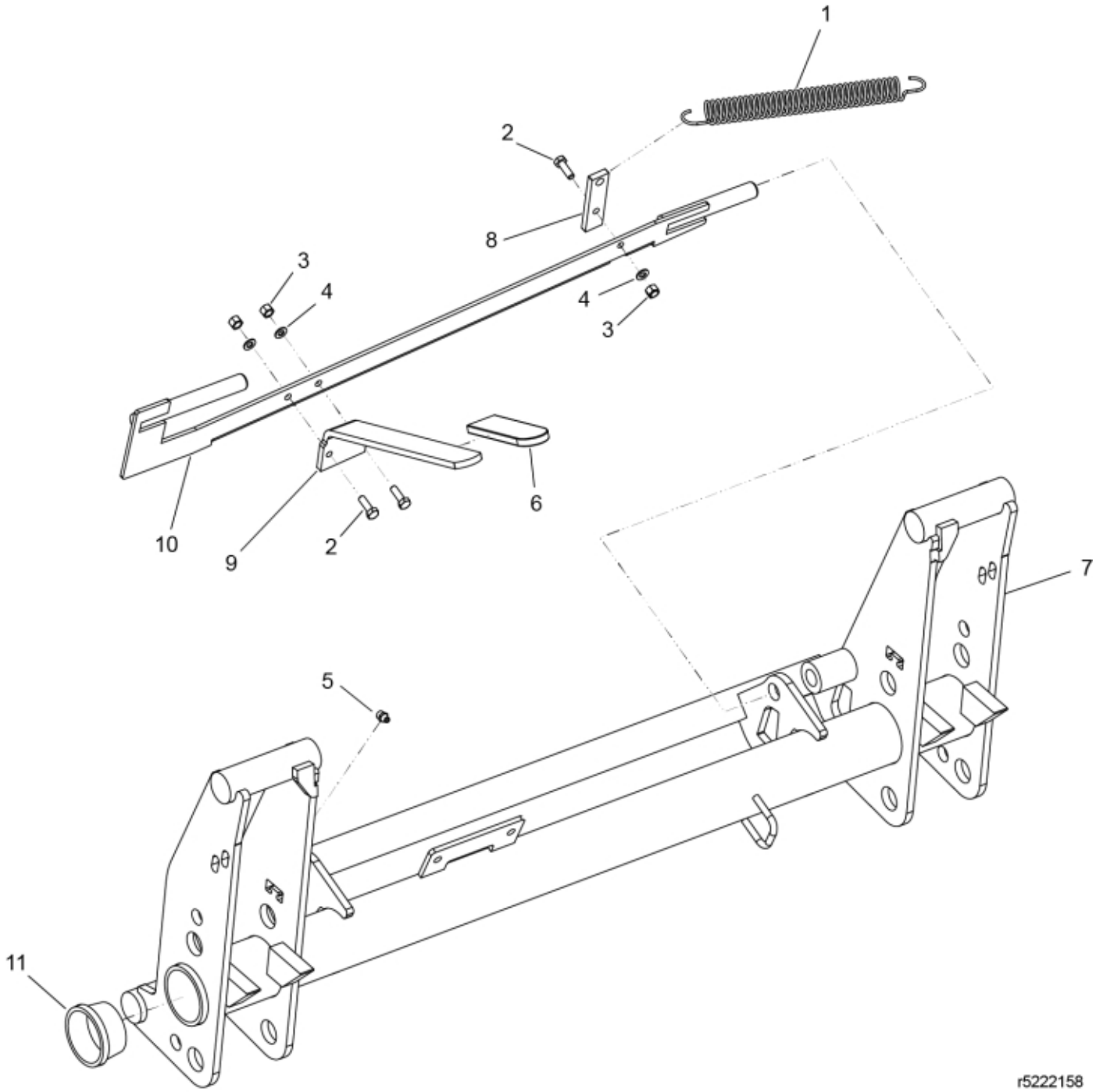

© 2025 Jost

Description	Tool carrier
Part assemblies	Euro
Specification	Specification: MF Red

PartNo	Pos	Qty	Name	Specifications
5222158-19		1 PCS	Euro	MF Red
1101035	1	1	Spring	
5002053	2	3	Screw	M6S 8 x 30
5011553	3	3	Nut	M6M M8 Loc-king
5013101	4	3	Washer	BRB 8,4 x 16
5023005	5	1	Greaser	M 10 x 1
5022144	6	1	Cover	
5222148-19	7	1 PCS	Tool carrier	MF Red
5221512-19	8	1 PCS	Bracket	MF Red
5221514-19	9	1 PCS	Handle	MF Red
5221594-19	10	1	Locking plate	MF Red
5221573	11	2	Plastic cover	

© 2025 Jost