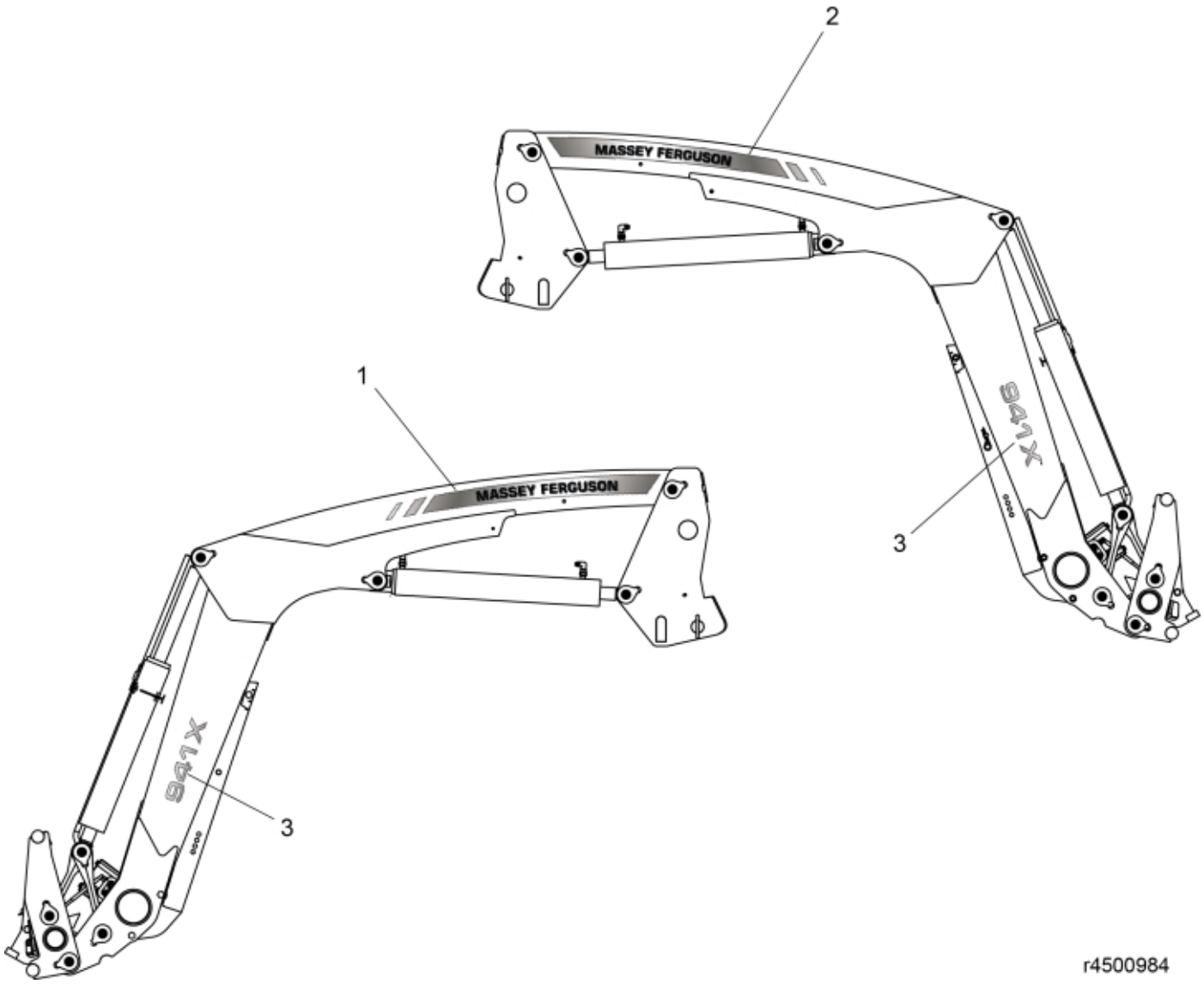

© 2025 Jost

Description	MF
Part assemblies	Decal kit 941X

PartNo	Pos	Qty	Name	Specifications
11137076	1	1 PCS	Decal Brand, LH	
11137078	2	1 PCS	Decal Brand, RH	
11137103	3	2 PCS	Decal, Model	

© 2025 Jost