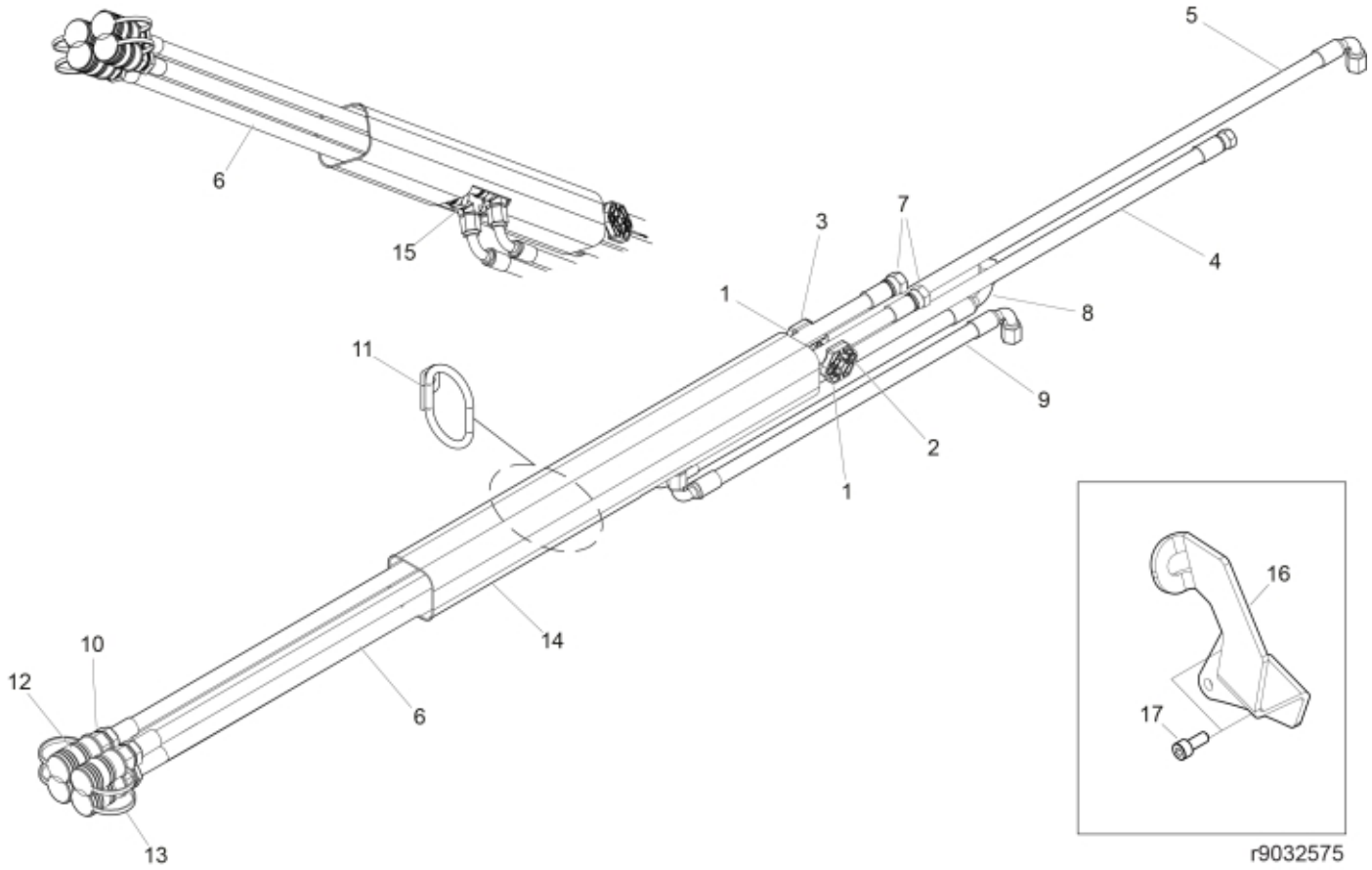

© 2025 Jost

Description	no harness
Part assemblies	Main hose kit

PartNo	Pos	Qty	Name	Specifications
5221919	1	2	Hose clamp	
5004947	2	2	Screw	MC6S M6x50
20708137	3	2	Nut	M6 FZB, 708137
9031713	4	1	Hose	3/8" L=4075mm
9031717	5	1	Hose	3/8" L=4610mm
9032334	6	2	Hose	1/2" L=850mm
9032340	7	2	Hose	1/2" L=3210mm
9031710	8	1	Hose	3/8" L=520mm
9031939	9	1	Hose	3/8" L=520mm
5013853	10	4	Dowty washer	Tredo 1/2", Part is included in kit 60007907 Hose cpl., 9032177 Hose cpl.
5221966	11	1	Hose guide	
5045010	12	4	Quick Coupling	ISO-A 3/8" F - G1/2
5034111	13	4	Dust Cover	ISO 3/8"
5051949	14	1	Hose cover	L=850
5028142	15	2	Adaptor	JIC 2x9/16 1x3/4
60049421	16	1	Holder kit	
5004061	17	2	• Screw	MC6S M8x20

© 2025 Jost