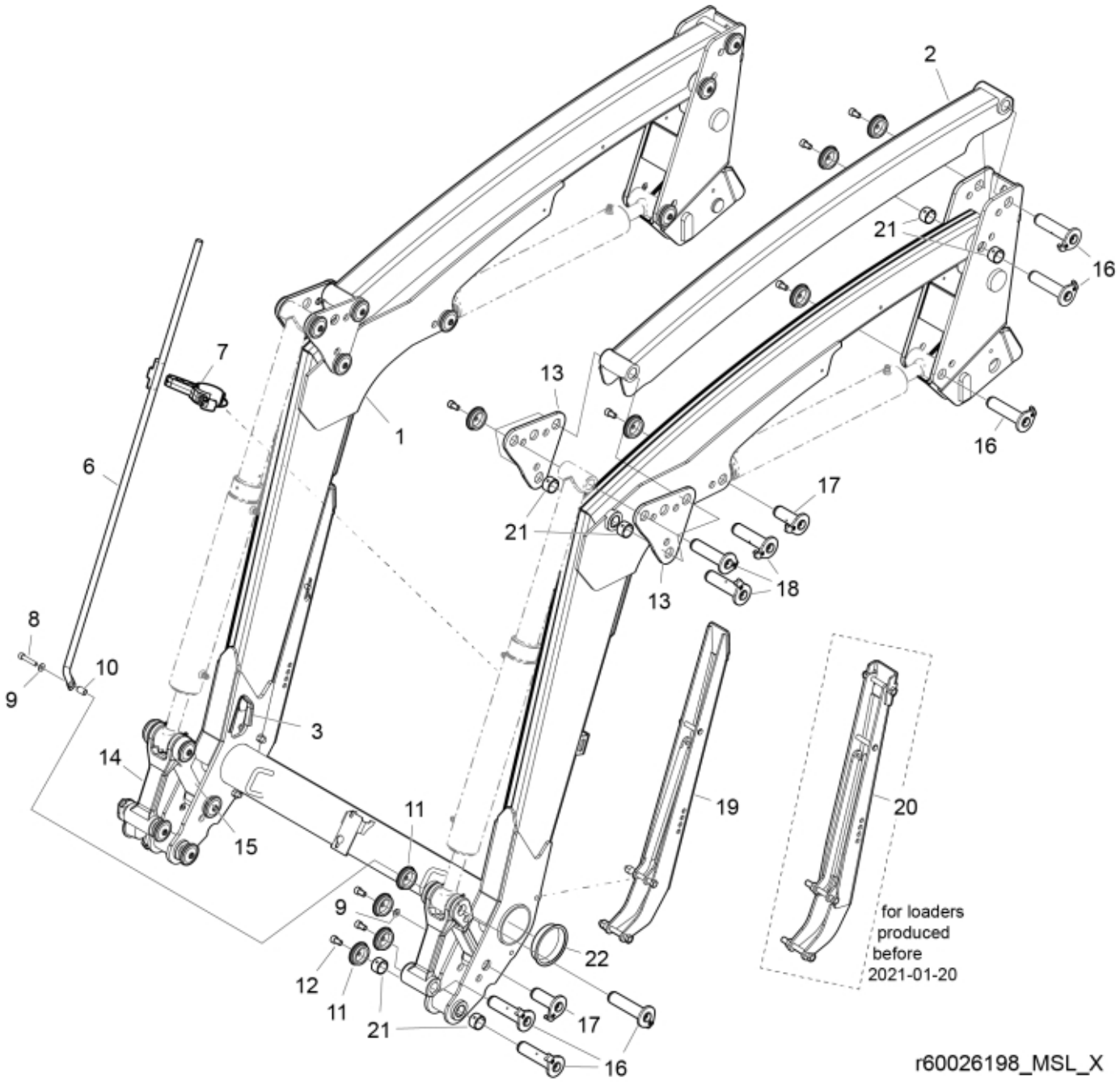
2
21
16
7
13
1
16
6
17
21
18
13
8
10
9
3
14
11
19
20
15
9
for loaders
produced
before
2021-01-20
22
12
11
21
17
16
r60026198_MSL_X

© 2025 Jost

Description	Versa-X
Part assemblies	Loader beam

PartNo	Pos	Qty	Name	Specifications
60057380-19	1	1	Loader beam	MF Red. Replaces 60013663-19.
5222137-19	2	2	Parallel rod	MF Red
5221974	3	2	Edge cover	
5215216	6	1	Indicator rod	
5053523	7	1	Holder kit	
5050605	8	1	Screw	MC6S 10x50 Loc
5013110	9	3	Washer	BRB 10.5x22x2
5215227	10	1	Spacer	
5215131	11	22	Locking cover	
5050608	12	21	Screw	MC6S M10x20 Loc
5221973-19	13	4	Link	MF Red
5221361-1	14	2	Link	Glossy Black
5221365-1	15	2	Link	Glossy Black
60018046	16	12	Pivot Pin	D=30, L=127mm
60018050	17	4	Pivot Pin	D=30, L=84mm
9020100	18	6	Pivot Pin	D=30, L=122mm
60058245-19	19	2 PCS	Support leg	MF Red, 1/20/2021 12:00:00 AM For loaders produced from 2021/01/20
5221343-19	20	2 PCS	Support leg	MF Red, 1/19/2021 12:00:00 AM For loaders produced until 2021/01/19
5018515	21	12	Bushing	D30 L=20
5221572	22	2 PCS	Plastic cover	

© 2025 Jost