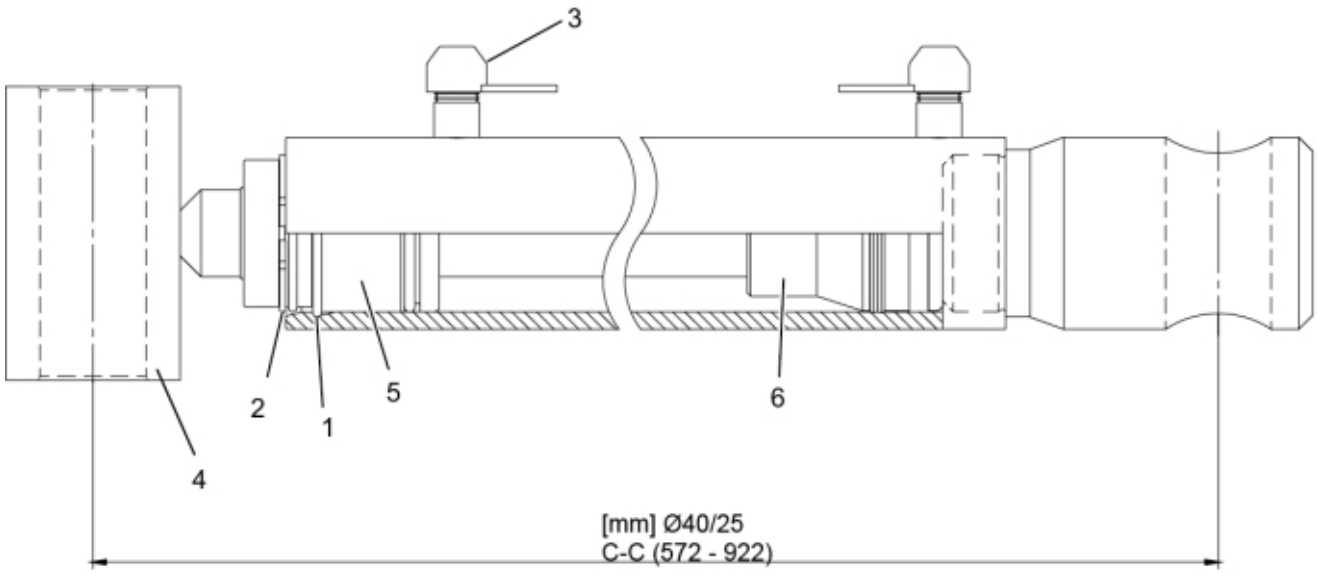

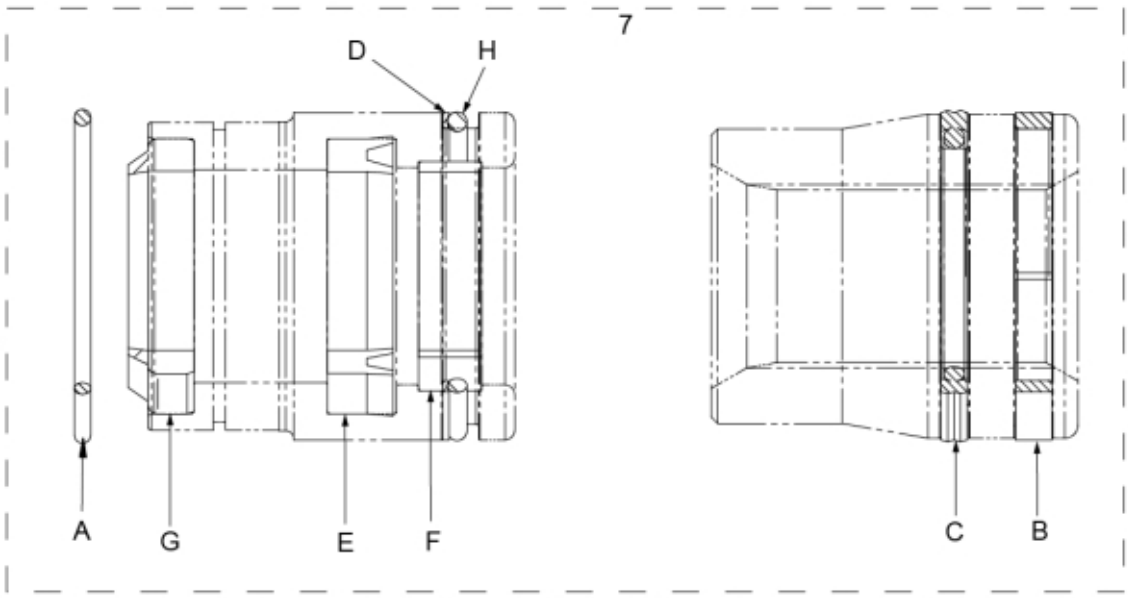

r12724310

© 2025 Jost

Description	40/25
Part assemblies	Cylinder
Specification	Specification: Glossy Black

PartNo	Pos	Qty	Name	Specifications
5017011	1	1	Retaining ring	
5017010	2	1	Retaining ring	
5028083	3	2	Plug	
12724313	4	1	Piston rod	
12704011	5	1 PCS	Bearing	
12704012	6	1	Piston	
5034251	7	1	Seal kit	
5039040	A	1 PCS	• O-ring	35 x 2.5
5040087	B	1	• Guide ring	40 x 35 x 5.5
5040086	C	1	• Piston seal	40.6 x 29 x 4
5040085	D	1 PCS	• Support Ring	40 x 35 x 1
5040083	E	1	• Seal kit	33 x 25 x 5.7
5040076	F	1	• Guide ring	28 x 25 x 9.6
5040084	G	1	• Wiper	33 x 25 x 4
5037266	H	1 PCS	• O-ring	34.2 x 3

© 2025 Jost