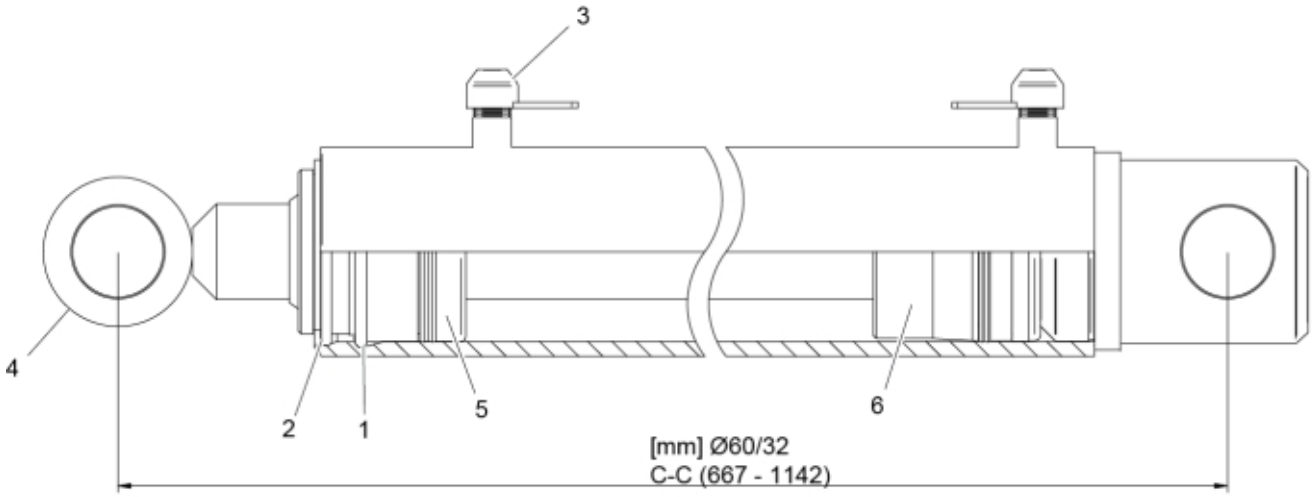

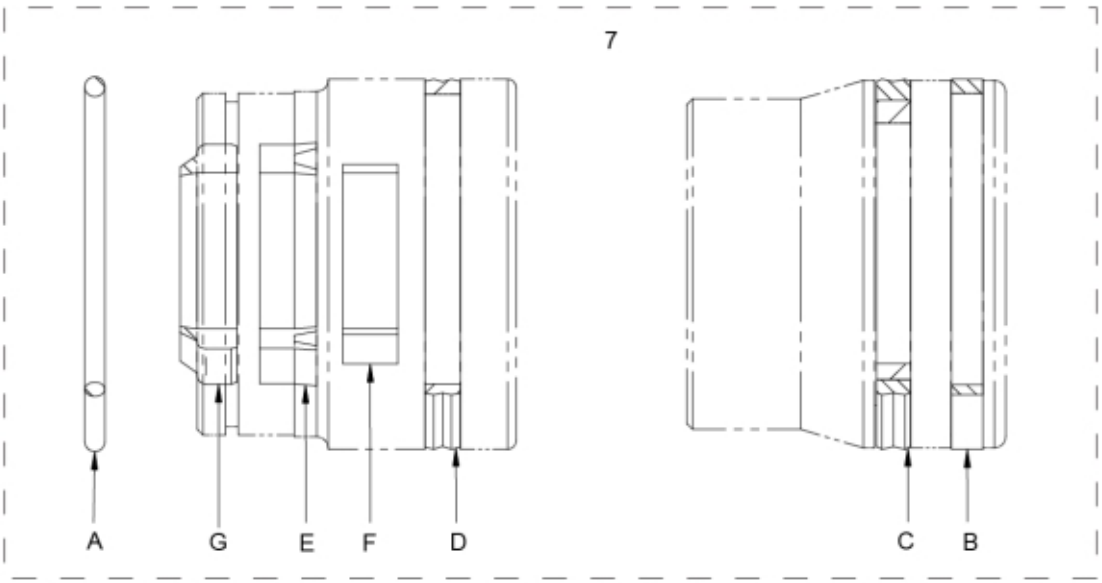

r12726210

© 2025 Jost

Description	60/32
Part assemblies	Lift Cylinder
Specification	Specification: Glossy Black

PartNo	Pos	Qty	Name	Specifications
5017000	1	1	Retaining ring	
5017001	2	1	Retaining ring	
5028083	3	2	Plug	
12726213	4	1	Piston rod	
12716011	5	1	Bearing	
12706212	6	1	Piston	
5034114	7	1	Seal kit	
5039028	A	1	• O-ring	55.56 x 3.53
5040054	B	1	• Guide ring	60 x 55 x 5.5
5040055	C	1	• Piston seal	60.6 x 49 x 4
5040056	D	1	• Seal kit	60 x 53.6 x 5.6
5040057	E	1	• Seal kit	43 x 31 x 10
5040058	F	1	• Guide ring	35 x 9.6
5040059	G	1	• Wiper	42 x 31 x 10

© 2025 Jost