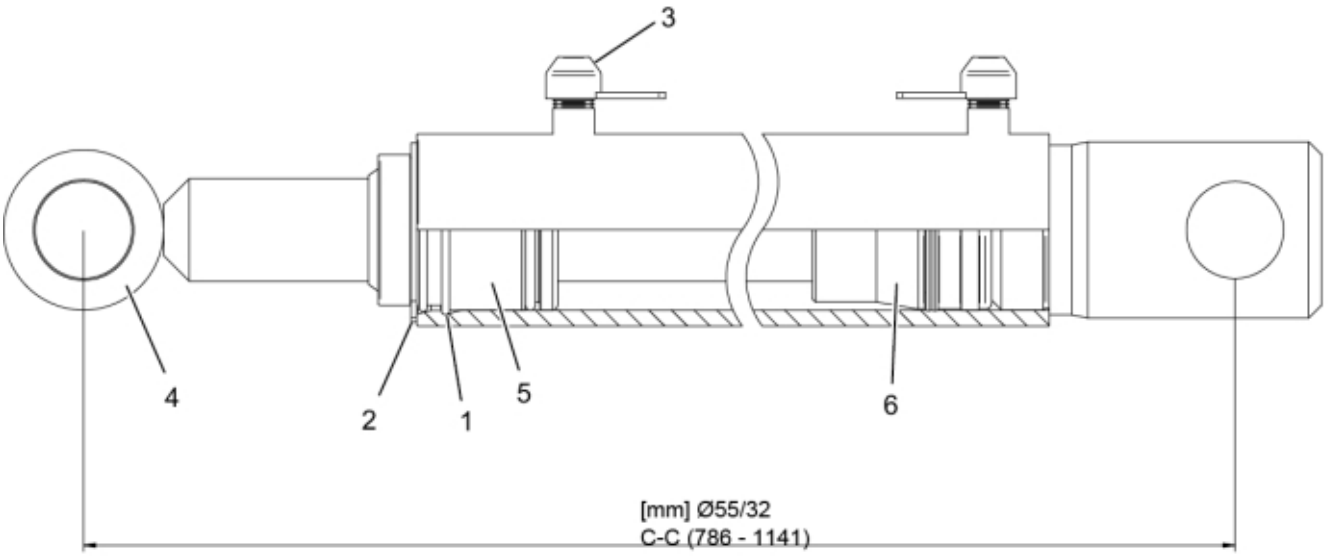

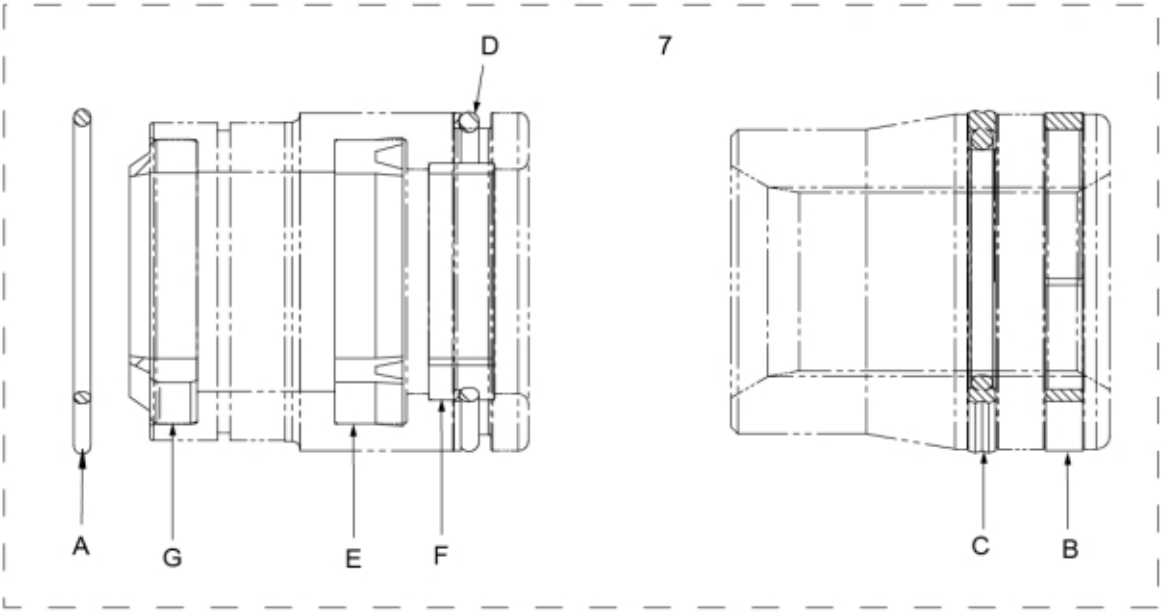

r12725710

© 2025 Jost

Description	55/32
Part assemblies	Cylinder
Specification	Specification: Glossy Black

PartNo	Pos	Qty	Name	Specifications
5017007	1	1	Retaining ring	
5017006	2	1	Retaining ring	
5028083	3	2	Plug	
12725713	4	1	Piston rod	
12726611	5	1 PCS	Bearing	
12726612	6	1	Piston	
5034273	7	1	Seal kit	
5039053	A	1 PCS	• O-ring	50.8 x 3.53
5040092	B	1	• Guide ring	55 x 50 x 5.5
5040093	C	1	• Piston seal	55.6 x 44 x 4
5040091	D	1	• Seal kit	55.6 x 49.2 x 5.6
5040057	E	1	• Seal kit	43 x 31 x 10
5040058	F	1	• Guide ring	35 x 9.6
5040059	G	1	• Wiper	42 x 31 x 10

© 2025 Jost