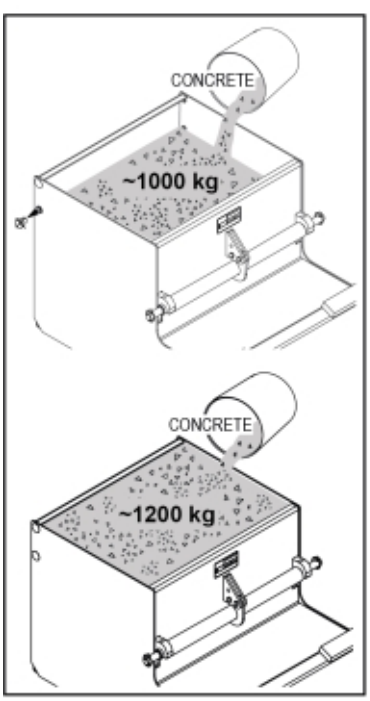

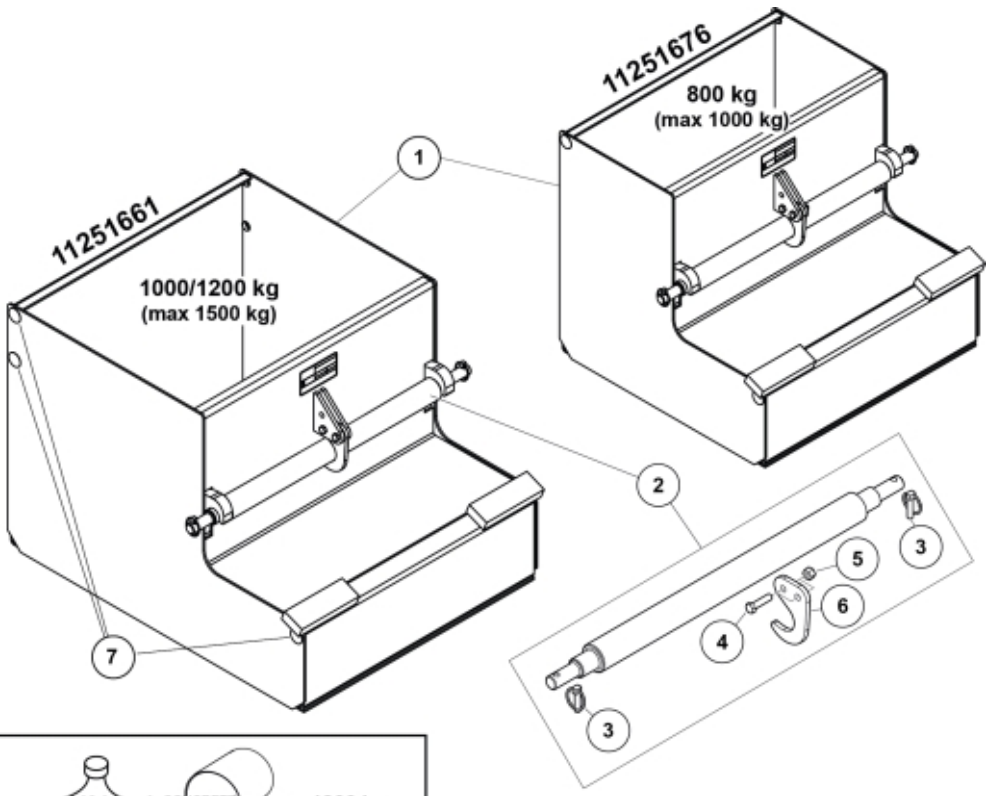

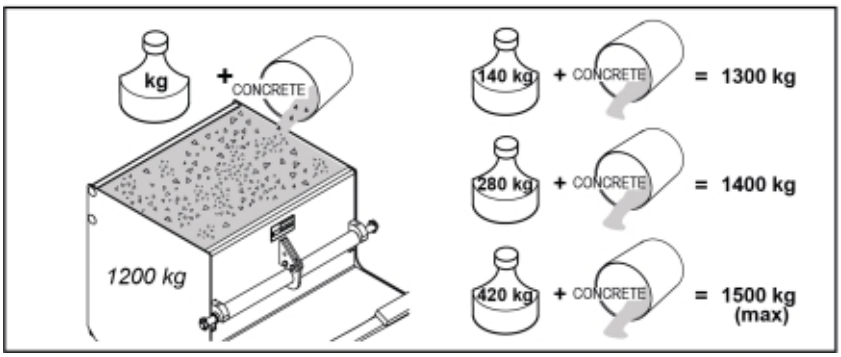



M 11251661_11251676

© 2025 Jost

Description	Cat. 2/3N
Part assemblies	Counterweight

PartNo	Pos	Qty	Name	Specifications
11251661		1 PCS	Counterweight	for 3 point lift, cat. 2/3N
11261122	1	1 PCS	Counterweight, box	
11261278	2	1 PCS	Mounting Kit	
1102001	3	2	• Linch pin	
5002106	4	2	• Screw	M12 x 50 (8.8)
5011555	5	2	• Nut	M12 Loc
11261271	6	1	• Locking mechanism	
5022119	7	6	Plug	
60049053	8	2	Decal	"Q" small 80x57

© 2025 Jost