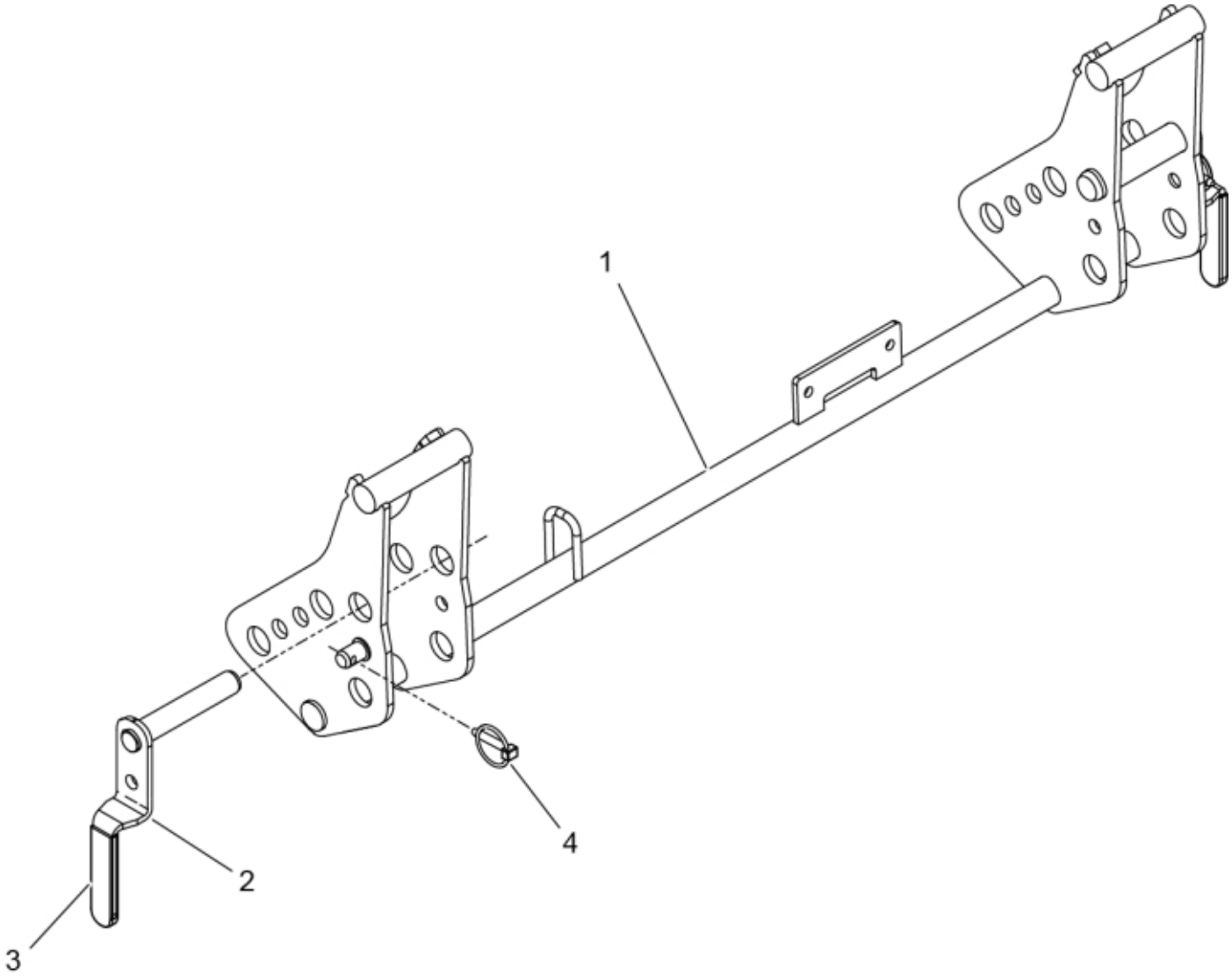

r5221422

© 2025 Jost

Description	Tool carrier
Part assemblies	Euro
Specification	Specification: MF Red

PartNo	Pos	Qty	Name	Specifications
5221422-19		1 PCS	Euro	MF Red
5221369-19	1	2 PCS	Tool carrier	MF Red
5221401	2	2	Locking Pin	
20719363	3	2	Handle	719363
5017002	4	2	Linch pin	

© 2025 Jost