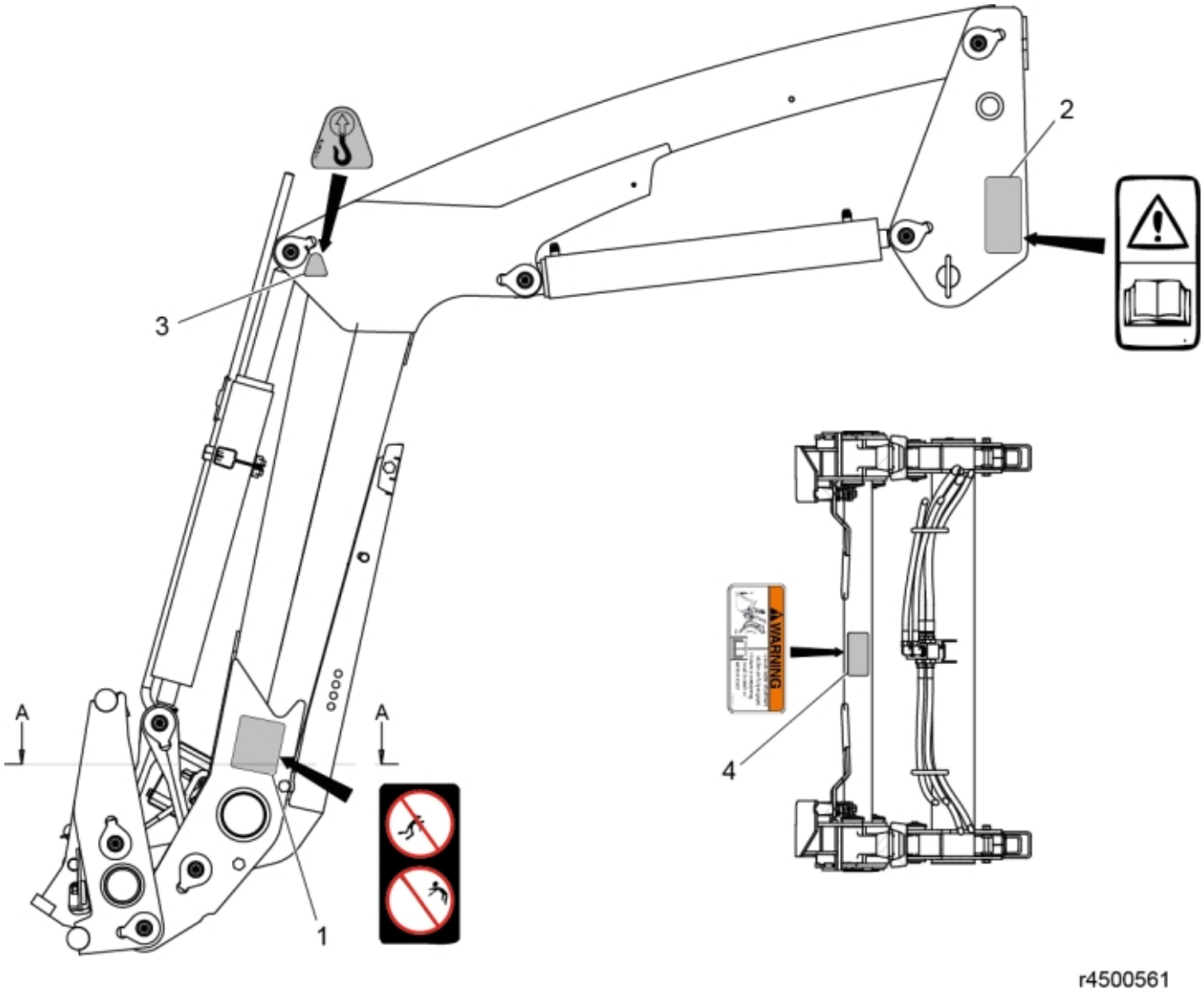

© 2025 Jost

Part assemblies Warning decal kit EU

PartNo	Pos	Qty	Name	Specifications
1123673	1	2	Warning decal	
1123674	2	1	Warning decal	"Read manual"
1123676	3	2	Decal, lift	
11135077	4	1 PCS	Warning decal	

© 2025 Jost