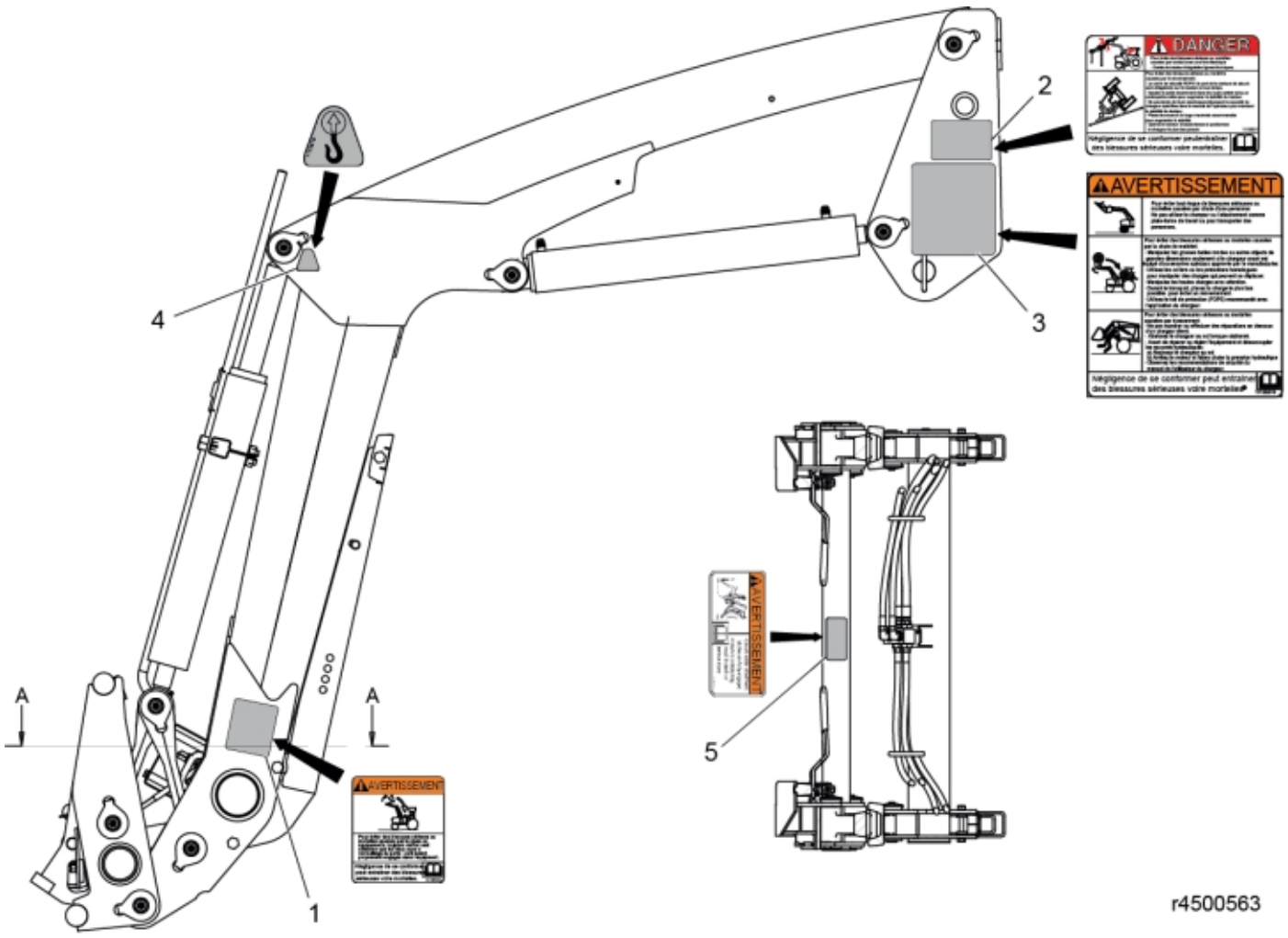
DANGER
AVERTISSEMENT
AVERTISSEMENT
AVERTISSEMENT
1
2
3
4
5
A
A
r4500563

© 2025 Jost

Part assemblies Warning decal kit Am-Fr

PartNo	Pos	Qty	Name	Specifications
11135315	1	2 PCS	Warning decal	
11135317	2	1 PCS	Decal, Danger	
11135316	3	1 PCS	Warning decal	
1123676	4	2	Decal, lift	
11135318	5	1 PCS	Warning decal	

© 2025 Jost