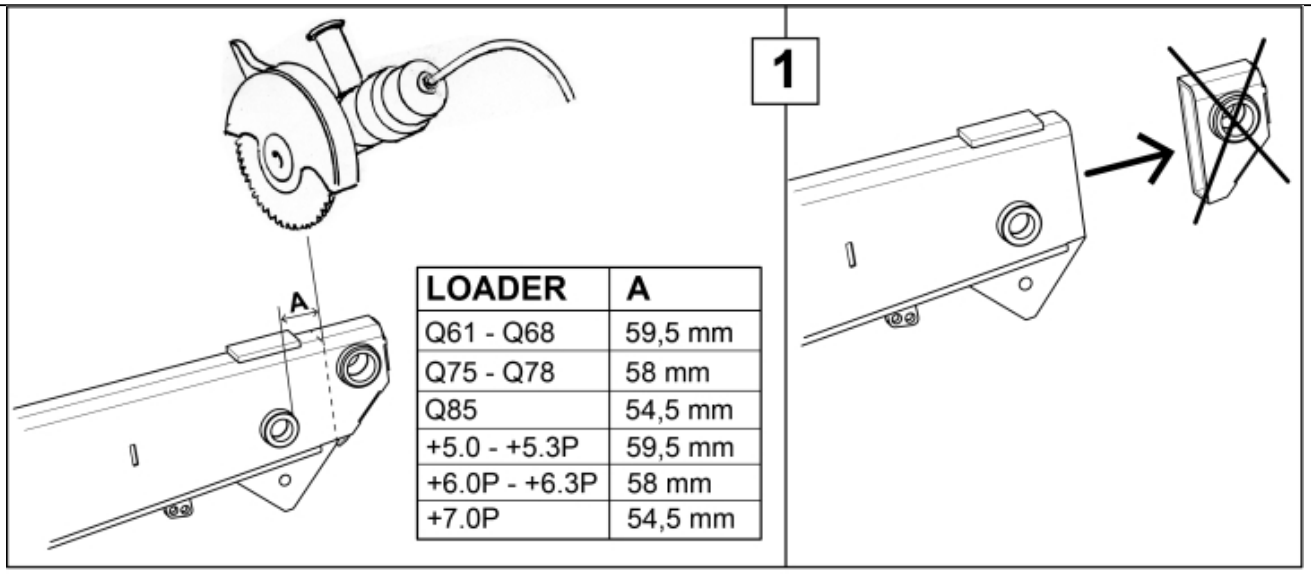

LOADER	A
Q61 - Q68	59,5 mm
Q75 - Q78	58 mm
Q85	54,5 mm
+5.0 - +5.3P	59,5 mm
+6.0P - +6.3P	58 mm
+7.0P	54,5 mm

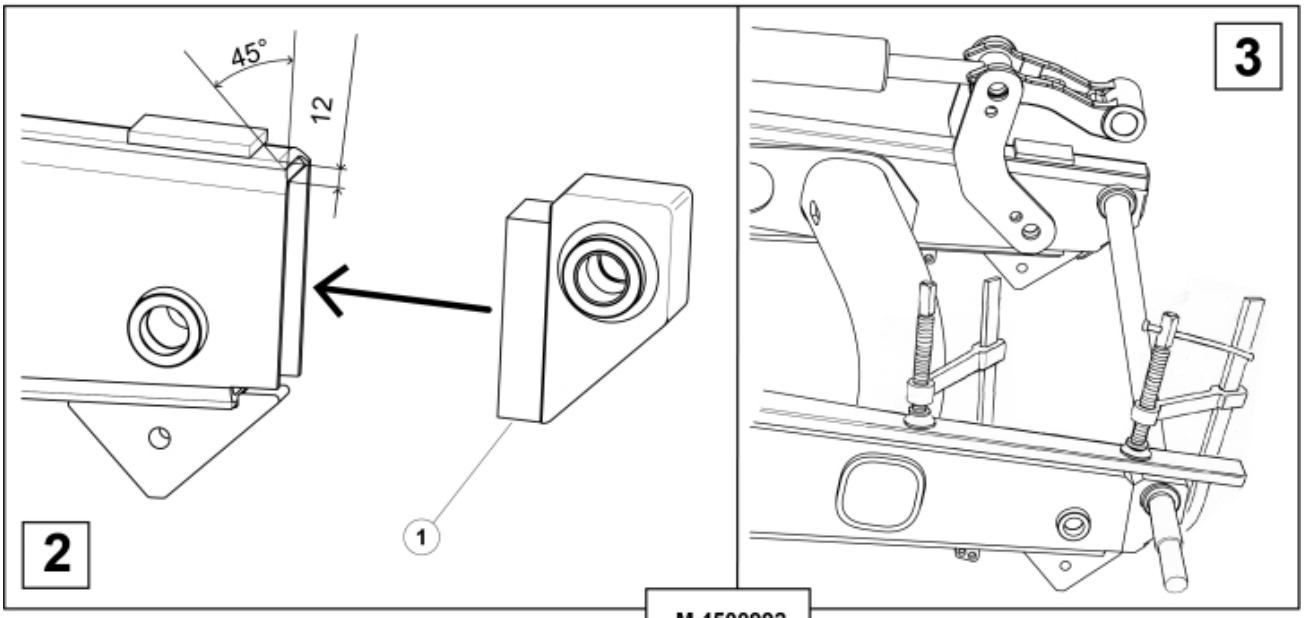

M 4500992

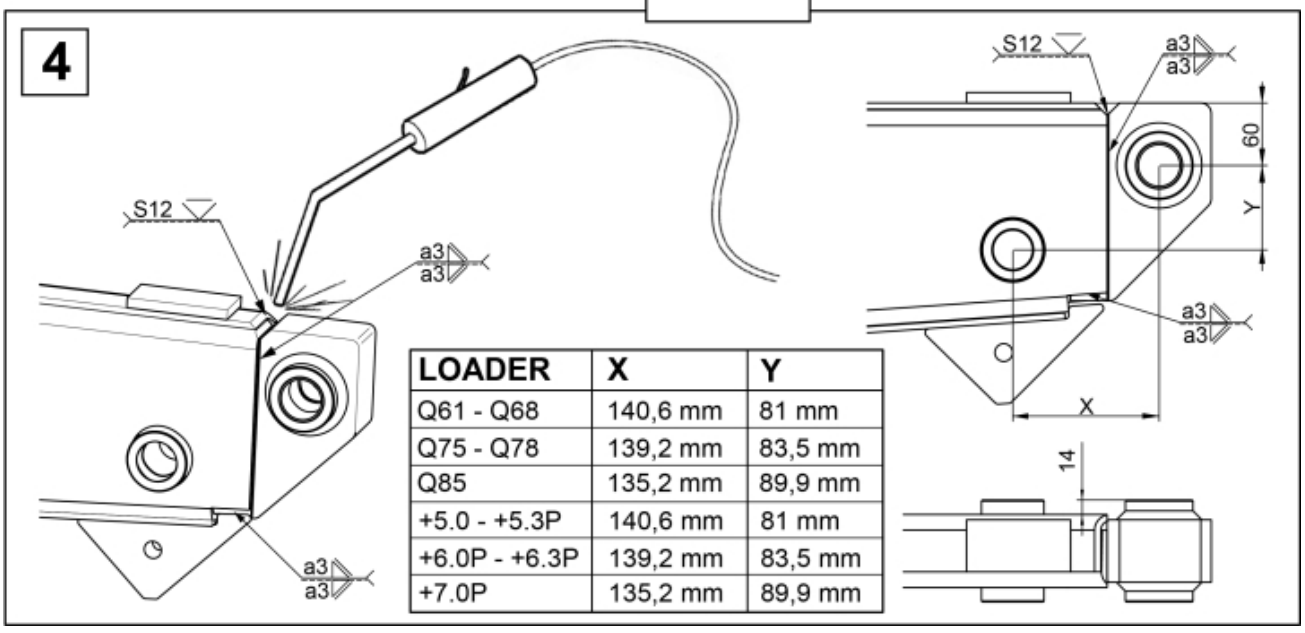

LOADER	X	Y
Q61 - Q68	140,6 mm	81 mm
Q75 - Q78	139,2 mm	83,5 mm
Q85	135,2 mm	89,9 mm
+5.0 - +5.3P	140,6 mm	81 mm
+6.0P - +6.3P	139,2 mm	83,5 mm
+7.0P	135,2 mm	89,9 mm

© 2025 Jost

Description	Q61 - Q85
Part assemblies	Repair Kit
Specification	Specification: Q61 - Q85

PartNo	Pos	Qty	Name	Specifications
4500992			Repair Kit	Q61 - Q85
4500932	1	2 PCS	Bearing piece	Front arm

© 2025 Jost