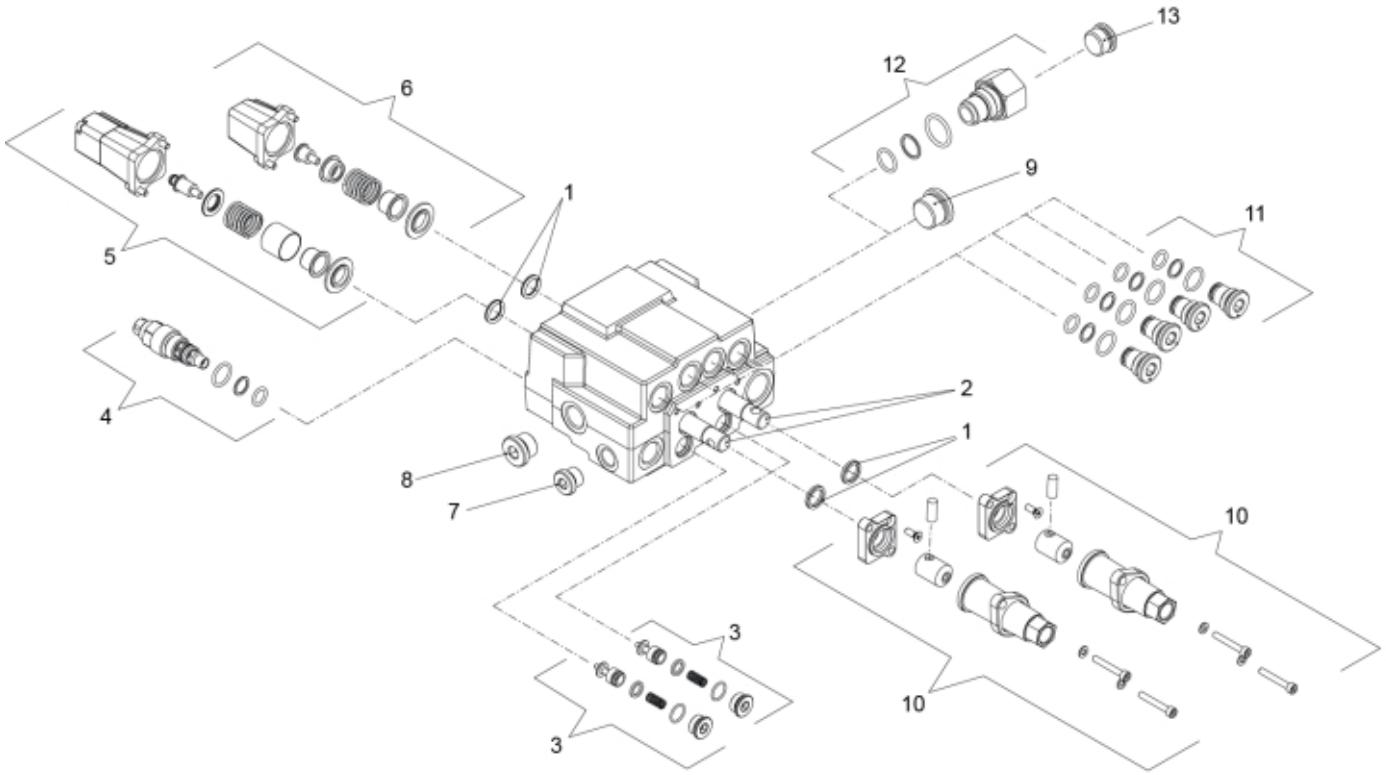

50020435

© 2025 Jost

Description	Nimco CV452
Part assemblies	Control valve OC Wire

PartNo	Pos	Qty	Name	Specifications
50020435		1 PCS	Control valve OC Wire	
5034424	1	4	Seal kit	
5034364	2	2 PCS	Spool control	
5034367	3	2 PCS	Load holding valve	
5034365	4	1 PCS	Pressure relief valve	
5034368	5	1 PCS	Spool control	
5034374	6	1 PCS	Spool control	
5034371	7	1 PCS	Plug	
5034369	8	1 PCS	Plug	
5034370	9	1 PCS	Plug	
5034376	10	2 PCS	Wire control	
5034366	11	4 PCS	Plug	
5034375	12	1 PCS	Adapter	BSP G3/4"
5034372	13	1 PCS	Plug	

© 2025 Jost