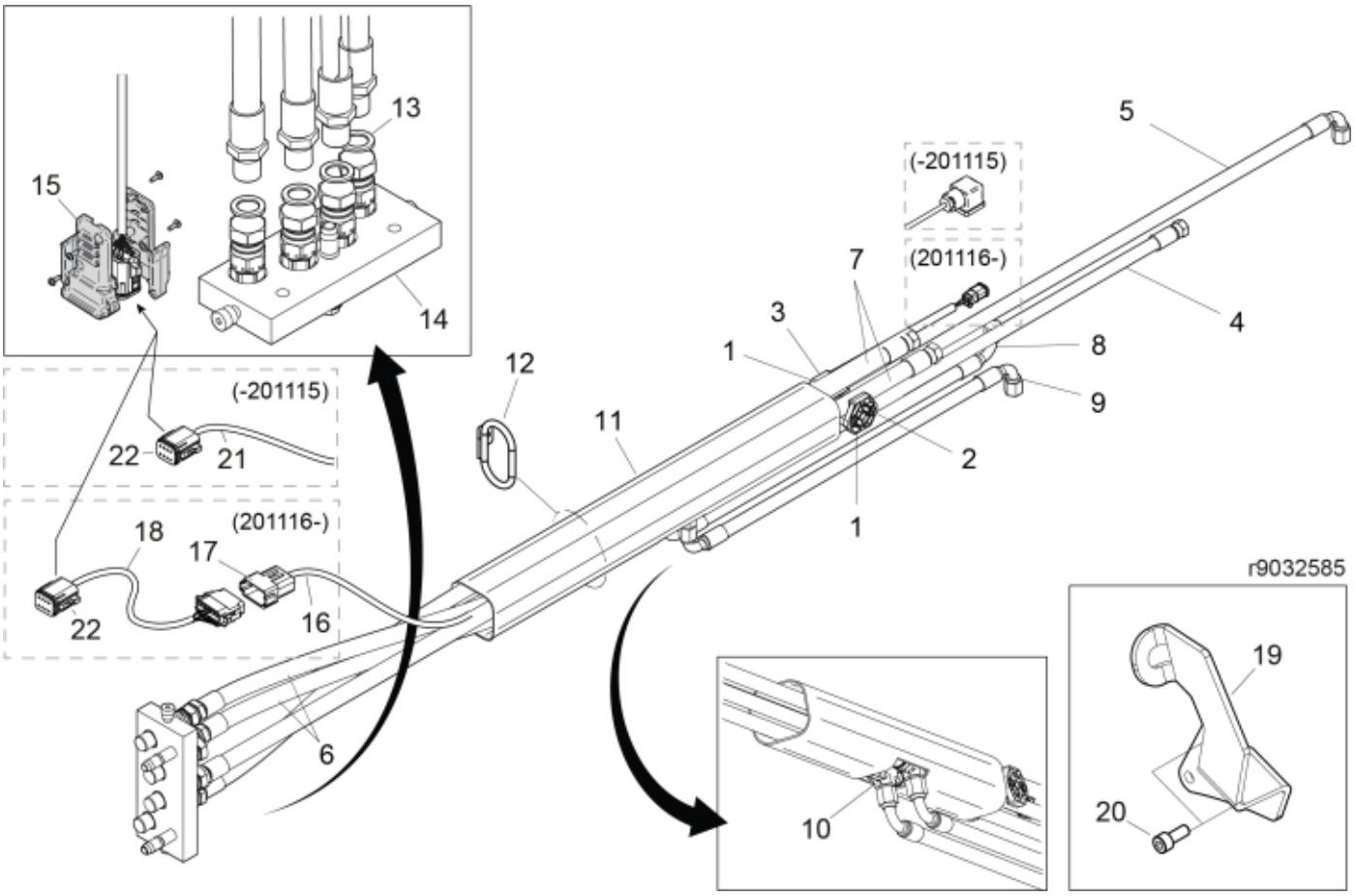
13
15
14
(-201115)
22
21
(201116-)
18
17
22
16
6
12
11
1
3
7
(-201115)
(201116-)
5
4
8
9
2
1
r9032585
10
19
20

© 2025 Jost

Description	3rd service
Part assemblies	Main hose kit, HQ-4

PartNo	Pos	Qty	Name	Specifications
5221880	1	2	Hose clamp	
5004030	2	2	Screw	MC6S M6 x 45
20708137	3	2	Nut	M6 FZB, 708137
9031712	4	1	Hose	3/8" L=3860mm
9031716	5	1	Hose	3/8" L=4280mm
9032331	6	2	Hose	3/8" L=850mm
9032333	7	2	Hose	3/8" L=3040mm
9031710	8	1	Hose	3/8" L=520mm
9031939	9	1	Hose	3/8" L=520mm
5028142	10	2	Adaptor	JIC 2x9/16 1x3/4
5051949	11	1	Hose cover	L=850
5221966	12	1	Hose guide	
5013853	13	4	Dowty washer	Tredo 1/2", Part is included in kit 60007907 Hose cpl., 9032177 Hose cpl.
5045403	14	1	Multi coupling, upper part	Upper part
5103054	15	1	Connector handle	
59050122	16	1	Electr. Cable	QCS (12P connector) for loaders produced from 2020/11/16
5050918	17	1	• Connector	Deutsch DT 12 pin female
59050115	18	1	Electr. Cable	QCS to LCS for loaders produced from 2020/11/16
60049421	19	1	Holder kit	
5004061	20	2	• Screw	MC6S M8x20
5102206	21	1	Harness	8-pin Deutsch for loaders produced until 2020/11/15
5101083	22	1	• Connector, male	8-Pole

© 2025 Jost